DVD Micro Theatre

MCD735

all versions

Service
Service
Service

Service Manual

TABLE OF CONTENTS

Handling chip components 1-1
Leadfree and safety information....1-2

Technical specification....2-1
Service measurement setup....2-2

Connections and controls....3-1...3-4

Software vesion check and upgrading....4-1

Block diagram....5-1
Wiring diagram 6-1

Tuner Board
circuit diagram(only for-/37)....7-1
layout diagram(only for-/37)....7-2

circuit diagram(not for-/37). 7-3
layout diagram(not for-/37) 7-4

VFD Board
circuit diagram 8-1
layout diagram....8-2

CPU Board
circuit diagram 9-1
layout diagram ....9-2...9-3

AMP Board
circuit diagram. 10-1
layout diagram....10-2...10-3

DVD MPEG Board
circuit diagram. ....11-1...11-5
layout diagram....11-6

Exploded view diagram 12-1
Mechanical partslist....12-2

Electrical partslist....13-1...13-3

**CLASS 1
LASER PRODUCT**

© Copyright 2006 Philips Consumer Electronics B.V. Eindhoven, The Netherlands
All rights reserved. No part of this publication may be reproduced, stored in a retrieval system or transmitted, in any form or by any means, electronic, mechanical, photocopying, or otherwise without the prior permission of Philips.

Published by LX 0639 Service Audio Subject to modification

GB 3141 785 31220

Version 1.0

PHILIPS

HANDLING CHIP COMPONENTS

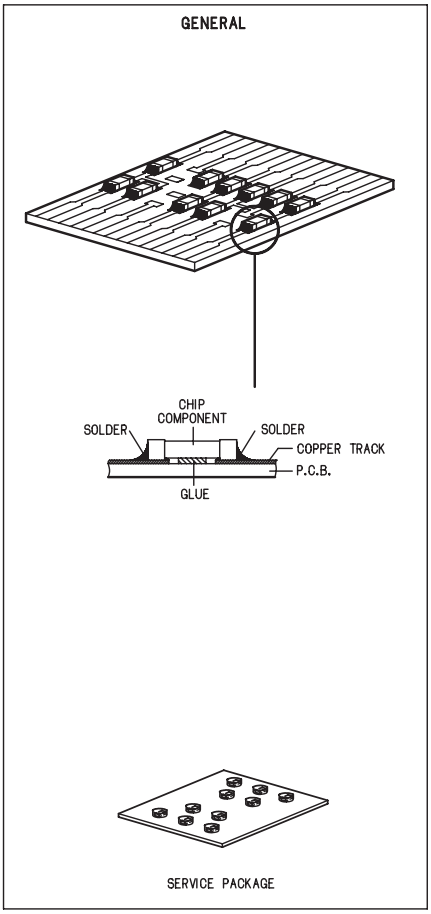

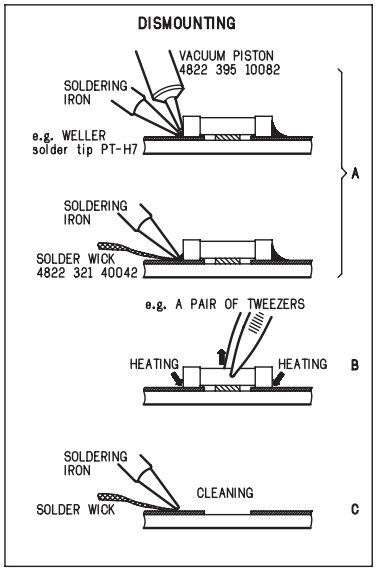

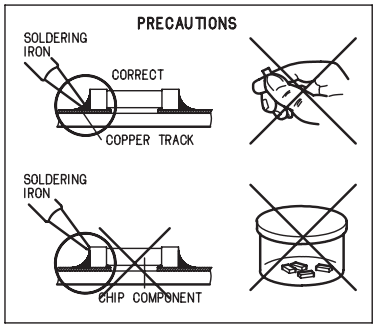

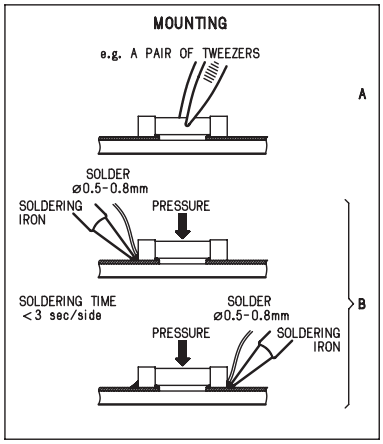

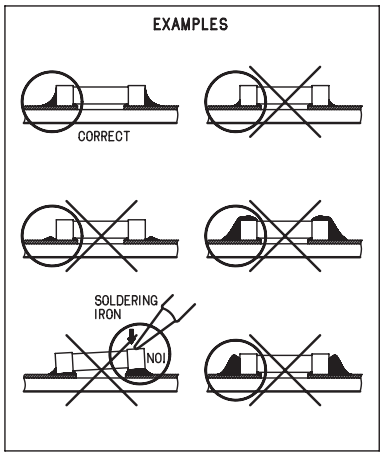

(GB) WARNING
All ICs and many other semiconductors are susceptible to electrostatic discharges (ESD). Careless handling during repair can reduce life drastically.
When repairing, make sure that you are connected with the same potential as the mass of the set via a wristband with resistance. Keep components and tools at this potential.

ESD

(NL) WAARSCHUWING
Alle IC´s en vele andere halfgeleiders zijn gevoelig voor electrostatische ontladingen (ESD).
Onzorgvuldig behandelen tijdens reparatie kan de levensduur drastisch doen vermindern. Zorg ervoor dat u tijdens reparatie via een polsband met weerstand verbonden bent met hetzelfde potentiaal als de massa van het apparaat.
Houd componenten en hulpmiddelen ook op ditzelfde potentiaal.

(F) ATTENTION
Tous les IC et beaucoup d´autres semi-conducteurs sont sensibles aux décharges statiques (ESD). Leur longévite pourrait être considérablement écourtée par le fait qu´aucune précaution nést prise à leur manipulation.
Lors de réparations, s´assurer de bien être relié au même potentiel que la masse de l´appareil et enfileer le bracelet serti d´une résistance de sécurité.
Veiller à ce que les composants ainsi que les outils que l´on utilise soient également à ce potentiel.

(D) WARNUNG
Alle ICs und viele andere Halbleiter sind empfindlich gegenüber elektrostatischen Entladungen (ESD).
Unsorgfältige Behandlung im Reparaturfall kann die Lebensdauer drastisch reduzieren.
Sorgen Sie dafür, daß Sie im Reparaturfall über ein Pulsarmband mit Widerstand mit dem Massepotential des Gerätes verbunden sind.
Halten Sie Bauteile und Hilfsmittel ebenfalls auf diesem Potential.

(I) AVVERTIMENTO
Tutti IC e parecchi semi-conduttori sono sensibili alle scariche statiche (ESD).
La loro longevità potrebbe essere fortemente ridatta in caso di non osservazione della più grande cauzione alla loro manipolazione. Durante le riparationi occorre quindi essere collegato allo stesso potenziale che quello della massa delápparecchio tramite un braccialetto a resistenza.
Assicurarsi che i componenti e anche gli utensili con quali si lavora siano anche a questo potenziale.

SAFETY

(GB)
Safety regulations require that the set be restored to its original condition and that parts which are identical with those specified be used.
Safety components are marked by the symbol ⚠

(NL)
Veiligheidsbepalingen vereisen, dat het apparaat in zijn oorspronkelijke toestand wordt teruggebracht en dat onderdelen, identiek aan de gespecificeerde, worden toegepast.
De Veiligheidsonderdelen zijn aangeduid met het symbool ⚠

(F)
Les normes de sécurité exigent que l`appareil soit remis à l`état d`origine et que soient utilisées les pièces de rechange identiques à celles spécifiées.
Les composants de sécurité sont marqués ⚠

(I)
Le norme di sicurezza estigono che l´apparecchio venga rimesso nelle condizioni originali e che siano utilizzati i pezzi di ricambiago identici a quelli specificati.
Componenty di sicurezza sono marcati con ⚠

(D)
Bei jeder Reparatur sind die geltenden Sicherheitsvorschriften zu beachten. Der Originalzustand des Gerätes darf nicht verändert werden. Für Reparaturen sind Originalersatzteile zu verwenden.
Sicherheitsbauteile sind durch das Symbol ⚠ markiert.

CLASS 1 LASER PRODUCT

(GB) **DANGER**: Invisible laser radiation when open. AVOID DIRECT EXPOSURE TO BEAM.

(S) Varning !
Osynlig laserstrålning när apparaten är öppnad och spärren är urkopplad. Betrakta ej strålen.

(DK) Advarsel !
Usynlig laserstråling ved åbning når sikkerhedsafbrydere er ude af funktion. Undgå udsaettelse for stråling.

(FIN) Varoitus !
Avatussa laitteessa ja suojalukituksen ohitettaessa olet alttiina näkymättömälle laserisäteilylle. Älä katso säteeseen !

(GB)
After servicing and before returning the set to customer perform a leakage current measurement test from all exposed metal parts to earth ground, to assure no shock hazard exists.
The leakage current must not exceed 0.5mA.

(F)
"Pour votre sécurite, ces documents doivent être utilisés par des spécialistes agréés, seuls habilités à réparer votre appareil en panne".

INFORMATION ABOUT LEAD-FREE SOLDERING

Philips CE is producing lead-free sets from 1.1.2005 onwards.
IDENTIFICATION:

Regardless of special logo (not always indicated) one must treat all sets from 1 Jan 2005 onwards, according next rules:

Example S/N:

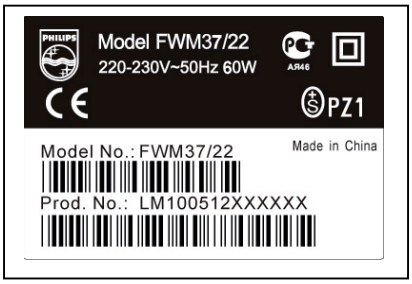

Bottom line of typeplate gives a 14-digit S/N. Digit 5&6 is the year, digit 7&8 is the week number, so in this case 2005 wk12

So from 0501 onwards = from 1 Jan 2005 onwards

***Important note*: In fact also products of year 2004 must be treated in this way as long as you avoid mixing solder-alloys (leaded/ lead-free). So best to always use SAC305 and the higher temperatures belong to this.**

Due to lead-free technology some rules have to be respected by the workshop during a repair:

- Use only lead-free solder alloy Philips SAC305 with order code 0622 149 00106. If lead-free solder-paste is required, please contact the manufacturer of your solder-equipment. In general use of solder-paste within workshops should be avoided because paste is not easy to store and to handle.

- Use only adequate solder tools applicable for lead-free solder alloy. The solder tool must be able
  - To reach at least a solder-temperature of 400°C,
  - To stabilize the adjusted temperature at the solder-tip
  - To exchange solder-tips for different applications.
- Adjust your solder tool so that a temperature around 360°C – 380°C is reached and stabilized at the solder joint. Heating-time of the solder-joint should not exceed ~ 4 sec. Avoid temperatures above 400°C otherwise wear-out of tips will rise drastically and flux-fluid will be destroyed. To avoid wear-out of tips switch off un-used equipment, or reduce heat.
- Mix of lead-free solder alloy / parts with leaded solder alloy / parts is possible but PHILIPS recommends strongly to avoid mixed solder alloy types (leaded and lead-free).
  If one cannot avoid or does not know whether product is lead-free, clean carefully the solder-joint from old solder alloy and re-solder with new solder alloy (SAC305).
- Use only original spare-parts listed in the Service-Manuals. Not listed standard-material (commodities) has to be purchased at external companies.
- Special information for BGA-ICs:
  - always use the 12nc-recognizable soldering temperature profile of the specific BGA (for de-soldering always use the lead-free temperature profile, in case of doubt)
  - lead free BGA-ICs will be delivered in so-called 'dry-packaging' (sealed pack including a silica gel pack) to protect the IC against moisture. After opening, dependent of MSL-level seen on indicator-label in the bag, the BGA-IC possibly still has to be baked dry. (MSL=Moisture Sensitivity Level). This will be communicated via AYS-website.
  Do not re-use BGAs at all.

- For sets produced before 1.1.2005 (except products of 2004), containing leaded solder-alloy and components, all needed spare-parts will be available till the end of the service-period. For repair of such sets nothing changes.

- On our website **www.atyourservice.ce.Philips.com** you find more information to:

  - BGA-de-/soldering (+ baking instructions)
  - Heating-profiles of BGAs and other ICs used in Philips-sets

  You will find this and more technical information within the "magazine", chapter "workshop news".

For additional questions please contact your local repair-helpdesk.

SERVICE INSTRUCTION

Safety regulations require that after a repair, the set must be returned in its original condition. Pay in particular attention to the following points:

- Route the wire trees correctly and fix them with the mounted cable clamps.
- Check the insulation of the AC Power lead for external damage.
- Check the strain relief of the AC Power cord for proper function.
- Check the electrical DC resistance between the AC Power Plug and the secondary side (only for sets which have a AC Power isolated power supply):

1. Unplug the AC Power cord and connect a wire between the two pins of the AC Power plug.
2. Set the AC Power switch to the "on" position (keep the AC Power cord unplugged!).
3. Measure the resistance value between the pins of the AC Power plug and the metal shielding of the tuner or the aerial connection on the set. The reading should be larger than 4.5 Mohm (For U.S. it should be between 4.2 Mohm and 12 Mohm).
4. Switch "off" the set, and remove the wire between the two pins of the AC Power plug.

- Check the cabinet for defects, to avoid touching of any inner parts by the customer.

TECHNICAL SPECIFICATIONS

SYSTEM

AC Power .....-/37 120 V / 60 Hz
Power .....-/93 220 V / 50 Hz
Power .....-/98 120 V / 230 V 60 Hz / 50 Hz
Rated working power consumption (1/8 rated output power) .....≤ 55W
AUX input sensitivity .....≤ 350mV
Channel Separation .....≥ 40dB
Distortion 0.7%

DVD

Frequency response ..... 125Hz-20kHz (±1dB)
Video output ..... 1 V^{P-P}
Video system ..... NTSC
Horizontal definition .....≥500 (TV)
Dimensions 208 (W) x 61.7 (H) x 244 (D) mm
Weight ..... 3.1 kg

AMPLIFIER

FTC output power
L, R main channel .....
..... 10W x 2 at 1KHz, THD =1%
L, R surround channel .....
..... 10W x 2 at 1KHz, THD =1%
Center ..... 10W at 1KHz, THD =1%
Subwoofer ..... 30W at 63Hz, THD =1%
Rated output power (RMS THD = 10%)
L, R main channel ..... 20W x 2 at 1KHz
L, R surround channel ..... 20Wx2 at 1KHz
Center ..... 20W at 1KHz
Subwoofer ..... 50W at 63Hz
Frequency response
L, R, Center ..... 125Hz -5/+2dB - 20kHz ± 3dB
Subwoofer 20-200Hz
S/N Ratio .....≥65dB
Loaded impedance ..... 8 Ω
Dimensions 208 (W) x 56.9 (H) x 244 (D) mm
Weight ..... 2.4 kg

TUNER

FM Frequency range ..... 87.5-108 MHz
FM Noise limit sensitivity .....≤ 20μ V/ M
FM S/N .....≥ 46dB
AM Frequency range ..... 520 - 1710 kHz
AM Noise limit sensitivity .....≤ 3.0mV/M
AM S/N .....≥ 40dB

SPEAKER

Front Speakers

System ..... 2-way shielded
Impedance ..... 8 Ω
Speaker drivers ..... 1x 3" woofer, ribbon tw
Dimensions (w x h x d) .....
..... 131 mm x 154 mm x 156 mm
Weight ..... 1.25 kg

Center Speaker

System ..... 2-way shielded
Impedance ..... 8 Ω
Speaker drivers ..... 4 x 2" woofer, 1.75" tw
Dimensions (w x h x d) .....
..... 284mm x 133 mm x 156 mm
Weight ..... 2.0 kg

Surround Speakers

System ..... 2-way shielded
Impedance ..... 8 Ω
Speaker drivers ..... 1 x 3" woofer, Pieze
Dimensions (w x h x d) .....
..... 131 mm x 154 mm x 156 mm
Weight ..... 1.25 kg

SUBWOOFER

Subwoofer (not magnetically shielded design) .....
..... 6.5"
Impedance ..... 8 Ω
Dimensions (w x h x d) .....
..... 180 mm x 276 mm x 330 mm
Weight ..... 4.45 kg

REMOTE

Distance ..... 6 m
..... 19.7 feet
Angle ..... ± 30^0

Specifications and external appearance are subject to change without notice.

SERVICE MEASUREMENT

Tuner FW

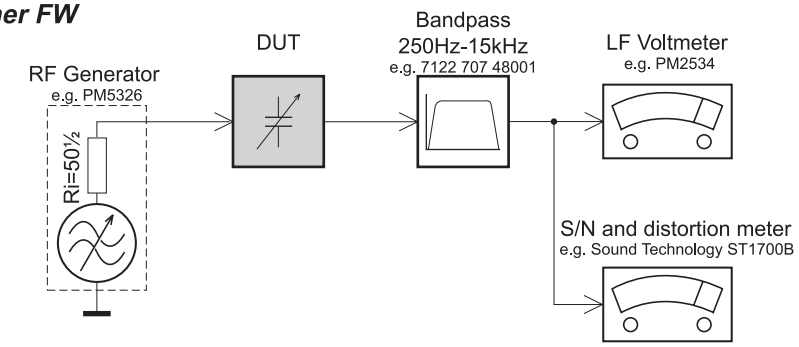

Use a bandpass filter to eliminate hum (50Hz, 100Hz) and disturbance from the pilottone (19kHz, 38kHz).

Tuner AM (MW,LW)

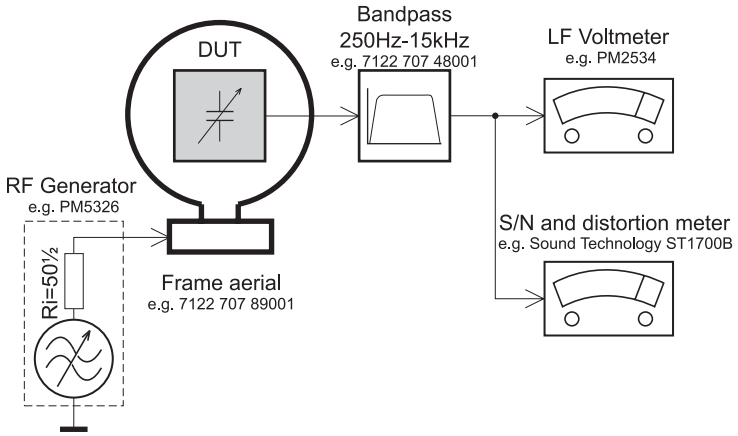

To avoid atmospheric interference all AM-measurements have to be carried out in a Faraday«s cage.
Use a bandpass filter (or at least a high pass filter with 250kHz) to eliminate hum (50Hz, 100Hz).

CD

Use Audio Signal Disc SBC429 4822 397 30184
(replaces test disc 3)

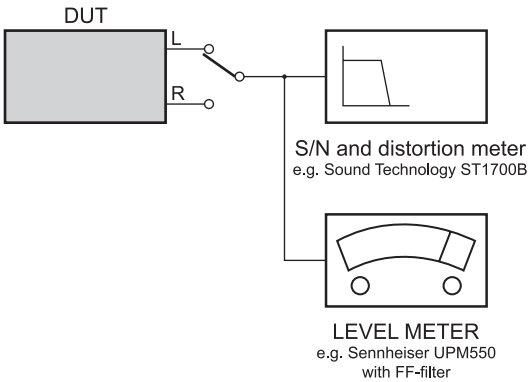

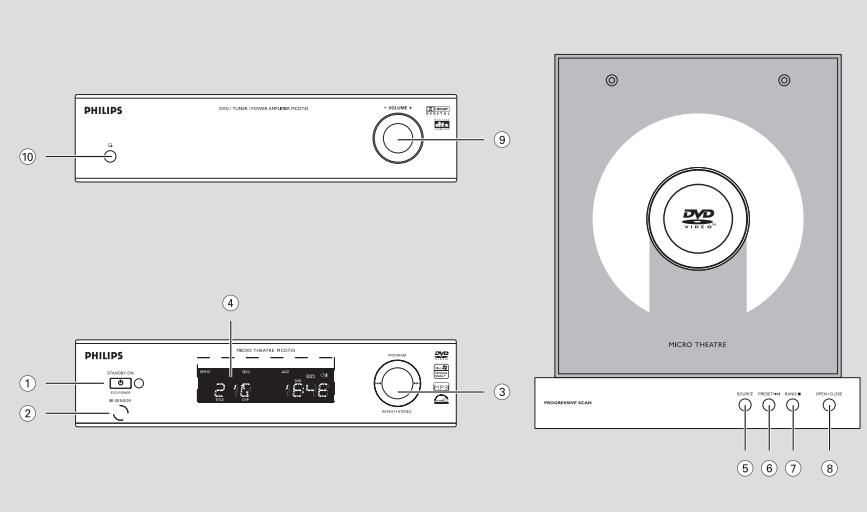

DVD player and power amplifier

① **ECO POWER/STANDBY ON** ⏻
– to switch the system on or to Eco power/normal standby mode.

② **IR SENSOR**
– point the remote control towards this sensor.

③ **Control knob**

I◄◄ / ►►I

Disc ..... press the control knob to the left/right to skip to the previous/ next chapter/title/track.
Tuner ..... press the control knob to the left/right to tune to a higher/ lower radio frequency.
..... press and hold, then release the key to start automatic search for a radio frequency downward/ upward.

PROGRAM

DVD/VCD/CD press the control knob upward to enter the program menu.
MP3/WMA-CD
..... press the control knob upward to add/delete a programmed track to/from the program list.
Picture CD ..... **during playback**, press the control knob upward to select a slide show mode.
Tuner ..... press the control knob upward to program preset radio stations.

REPEAT•STEREO

Disc ..... press the control knob downward to repeat a track or disc.
FM ..... press the control knob downward to set stereo or mono sound mode.

④ **Display**
– shows the current status of the DVD player.

⑤ **SOURCE**
– selects the respective sound source: DVD/ AUX1/AUX2/TUNER.
– switches the system on.

⑥ **PRESET/ ►II**
– **Disc:** starts or interrupts disc playback
– **TUNER:** selects a preset radio station

⑦ **BAND/■**
– **Disc:** stops disc playback or erases a program.
– **TUNER:** switches between AM and FM.
– **Demo mode** *(on the system only):* activates/ deactivates the demonstration.

⑧ **OPEN•CLOSE**
– opens or closes the disc compartment.

⑨ **VOLUME -/+**
– adjusts the volume upward/downward.
– adjusts the hours and minutes in clock/timer setting mode.
– switches the set timer ON or OFF.

⑩ 🎧
– connect a headphone

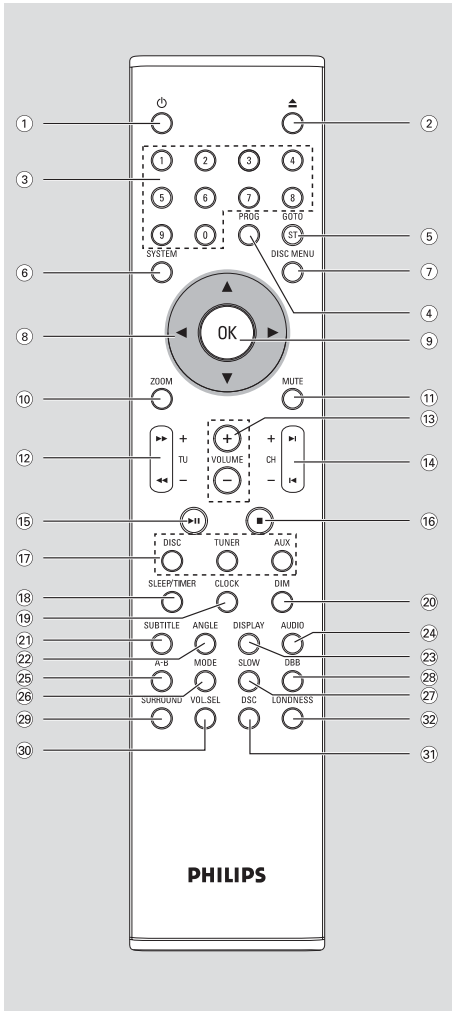

Remote control

① ⏻
– to switch the system on or to Eco power/normal standby mode.

② ⏏
– opens or closes the disc compartment

③ **Numeric Keypad (0-9)**
– inputs a track/title/chapter number of the disc.

④ **PROG**
– **DVD/VCD/CD:** enters the program menu.
– MP3/WMA-CD: adds/deletes a programmed track to/from the program list.
– Picture CD: **during playback**, to select a slide show mode.
– **Tuner:** programs preset radio stations.

⑤ **GOTO/ST**
– **Disc:** fast searches in a disc by entering a time, title, chapter or track.
– **FM:** sets stereo or mono sound mode.

⑥ **SYSTEM (disc mode only)**
– enters or exits the system menu.

⑦ **DISC MENU (disc mode only)**
– DVD/VCD: enters or exits the disc contents menu.
– VCD2.0: switches the playback control mode on or off .
– MP3/WMA: switches between Album and Filelist.

⑧ ▼ / ▲ / ▶ / ◀
– selects an item in a menu.
– moves an enlarged picture up/down/left/right.

⑨ **OK**
– confirms a selection.

⑩ **ZOOM**
– DVD/VCD/Picture CD: enlarges or reduces a picture or active image on the TV screen.

⑪ **MUTE**
– disables or enables sound output.

⑫ **TU +/- (◀◀ / ▶▶)**

Tuner
– press to tune to a lower/higher radio frequency gradually.
– press and hold, then release the key to start automatic search for a radio frequency downward/upward.

Disc
– searches backward/forward in a disc at different speeds.

⑬ **VOLUME +/-**
– adjusts the volume upward/downward.
– adjusts the hours and minutes in clock/timer setting mode.
– switches the set timer ON or OFF.

⑭ **CH +/-** (⏮ / ⏭)
– **Disc:** skips to the previous/next chapter/title/track
– **Tuner:** selects a preset radio station.

⑮ ▶II
– starts or interrupts disc playback.

⑯ ■
– stops disc playback or erases a program.

⑰ **DISC/TUNER/AUX**
– selects the respective sound source for DVD/TUNER/AUX1/AUX2.
– exits P-SCAN (progressive scan). (for **DISC** only)

⑱ **SLEEP/TIMER**

Standby mode
– sets a time for switching on the system automatically.

Power-on mode
– sets the sleep timer function (auto off).

⑲ **CLOCK**

Standby mode
– sets the system clock.

Playback mode
– displays the system clock.

⑳ **DIM**
– selects different levels of brightness for the display screen in standby mode.

Functional Overview

㉑ **SUBTITLE**
– selects a subtitle language.

㉒ **ANGLE**
– selects a DVD camera angle.

㉓ **DISPLAY**
– displays information on TV screen during playback

㉔ **AUDIO**

for VCD
– sets Stereo, Mono-Left or Mono-Right sound mode.

for DVD
– selects an audio language.

㉕ **A-B**
– repeats playback of a specific section on a disc.

㉖ **MODE**
– selects various repeat modes or the shuffle play mode for a disc.

㉗ **SLOW**
– selects different slow playback modes for a VCD/SVCD/DVD.

㉘ **DBB**
– enables or disables bass enhancement.

㉙ **SURROUND**
– selects 2.1 channel output (2.1CH) or 5.1 channel output (Pro Logic II or 5.1CH).

㉚ **VOL.SEL**
– adjusts volume level for individual speakers.

㉛ **DSC**
– selects different types of preset sound equalizer settings (CLASSIC, JAZZ, POP or ROCK).

㉜ **LOUDNESS (unavailable for this version)**
– enables or disables automatic loudness adjustment.

Notes for remote control:
– First, select the source you wish to control by pressing one of the source select keys on the remote control (DISC or TUNER, for example).
– Then select the desired function (▶II, ⏮, ⏭ for example).

IMPORTANT!
– The type plate is located at the bottom of the system.
– Before connecting the AC power cord to the wall outlet, ensure that all other connections have been made.
– Never make or change any connections with the power switched on.

Step 1: Placing the speakers and subwoofer

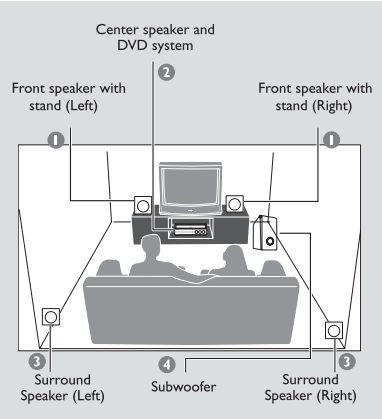

For best possible surround sound, all the speakers (except subwoofer) should be placed at the same distance from the listening position.

1. Place the front left and right speakers at equal distances from the TV and at an angle of approximately 45 degrees from the listening position.
2. Place the center speaker above the TV or the DVD system so that the center channel's sound is localized.
3. Place the rear speakers at normal listening ear level facing each other or hang on the wall.
4. Place the subwoofer on the floor near the TV.

Notes:
– To avoid magnetic interference, do not position the front speakers too close to your TV.
– Allow adequate ventilation around the DVD system.

Step 2: Connecting speakers and subwoofer

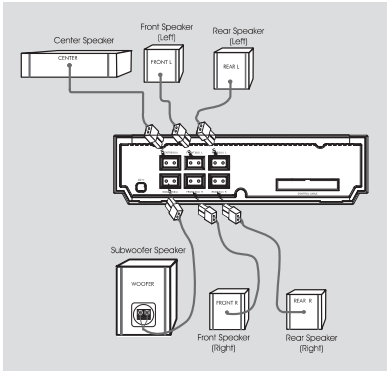

1. Connect the supplied front, rear and center speakers using the fixed speaker cables by matching the colors of the jacks and speaker cable connectors.
2. Connect the passive subwoofer to the WOOFER (8 Ω) terminal with the supplied subwoofer cable by matching the plug types.

Note:
– Ensure that the speaker cables are correctly connected. Improper connections may damage the system due to short-circuit.

Step 3: Connecting the control cable

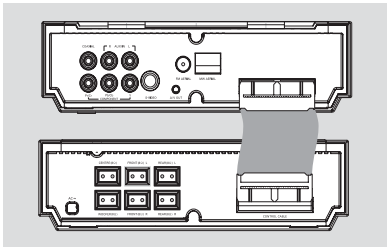

Connect the serial port marked "**CONTROL CABLE**" at the rear of the DVD player to the same port at the rear of the power amplifier with the supplied flat control cable.

Step 4: Connecting a TV

IMPORTANT!
– You only need to make one video connection from the following options, depending on the capabilities of your TV.
– Connect the DVD system directly to the TV.

Using AV OUT jack

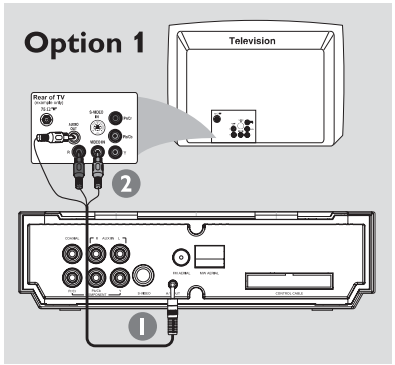

1. Connect the end of the supplied A/V cord with only one connector to the **A/V OUT** jack of the DVD system.
2. For the other end, connect the video output connector (yellow) to the video input jack (or labeled as A/V In, CVBS, Composite or Baseband) on the TV. To hear the sound of this DVD system through your TV, connect the audio connectors (white/ red) to the audio input jacks on the TV.

Using Component Video jacks (Y Pb Pr)

IMPORTANT!
– The progressive scan video quality is only possible when using Y Pb Pr, and a progressive scan TV is required.

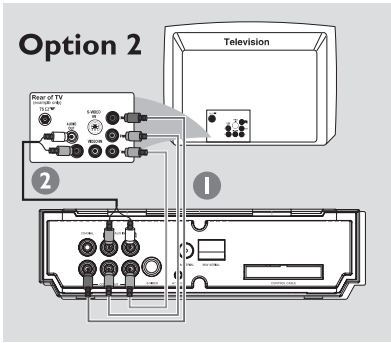

1. Use component video cables (red/blue/green - not supplied) to connect the DVD system's Y Pb Pr jacks to the corresponding Component video input jacks (or labeled as Y Pb/Cb Pr/Cr or YUV) on the TV.
2. To hear the TV channels through this DVD system, use the audio cables (white/red) to connect AUX IN jacks to the corresponding AUDIO OUT jacks on the TV.
3. If you are using a Progressive Scan TV (TV must indicate Progressive Scan or ProScan capability), to activate TV Progressive Scan, please refer to your TV user manual. For DVD system Progressive Scan function, see "Getting Started-Setting up Progressive Scan feature".

Note:
– If your TV does not support Progressive Scan, you will not be able to view the picture.
Press SYSTEM on the remote to exit the system menu and then DISC and "1" to exit progressive scan.

Using S-Video jack

IMPORTANT!
– If S-Video is used for DVD playback connection, the system's VIDEO OUT setting will need to be changed accordingly.

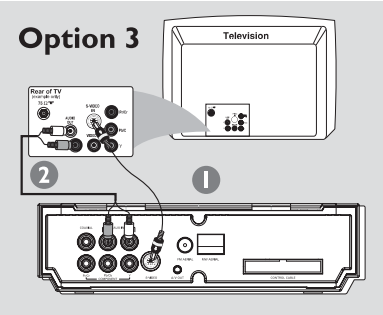

❶ Use an S-Video cable (not supplied) to connect the DVD system's S-VIDEO jack to the S-Video input jack (or labeled as Y/C or S-VHS) on the TV.

❷ To hear the TV channels through this DVD system, use the audio cables (white/red) to connect AUX IN jacks to the corresponding AUDIO OUT jacks on the TV.

Step 5: Connecting FM/AM antennas

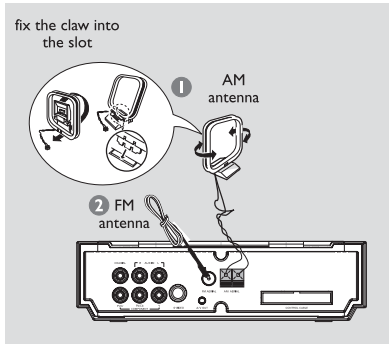

❶ Connect the supplied AM loop antenna to the AM jack. Place the AM loop antenna on a shelf or attach to a stand or wall.

❷ Connect the supplied FM antenna to the FM (75 Ω) jack. Extend the FM antenna and fix its end to the wall.
For better FM stereo reception, connect an external FM antenna (not supplied).

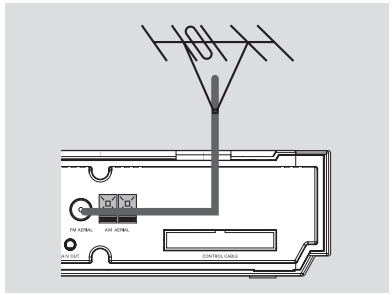

Note:
– Adjust the position of the antennas for optimal reception.
– Position the antennas as far as possible from your TV, VCR or other radiation source to prevent unwanted interference.

Step 6: Connecting the power cord

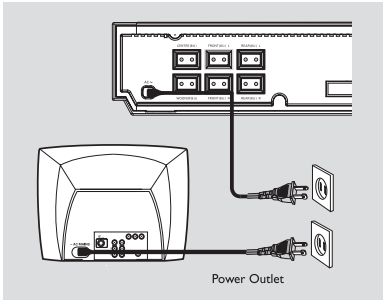

After everything is connected properly, plug in the AC power cord to the power outlet.
Never make or change any connection with the power switched on.

Optional: Connecting additional equipment

IMPORTANT!
– Some discs are copy-protected. You cannot record the disc through a VCR or digital recording device.
– When making connections, make sure the colour of cables matches the colour of jacks.
– Always refer to the owner's manual of the other equipment for complete connection and usage details.

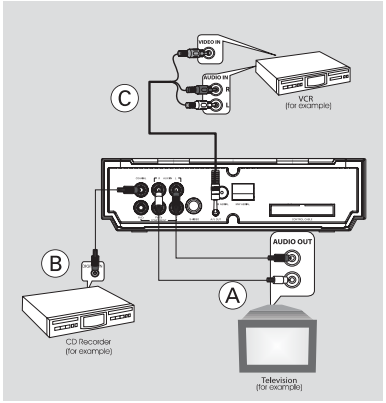

Viewing and listening to the playback of other equipment Ⓐ

- Connect the system's **AUX IN (R/L)** jacks to the AUDIO OUT jacks on the other audio/visual device (such as a TV, VCR, Laser Disc player or cassette deck).
  Before starting operation, press **SOURCE** on the system to select AUX or press **AUX** on the remote in order to activate the input source.

Recording (digital) Ⓑ

- Connect the system's **COAXIAL** jack to the DIGITAL IN jack on a digital recording device (such as DTS-Digital Theatre compatible, with Dolby Digital decoder).
  Before starting operation, set the DIGITAL OUT according to the audio connection. (See "DIGITAL OUT".)

Using the VCR for recording DVDs Ⓒ

- Connect the system's **A/V OUT** jacks to the corresponding VIDEO IN jack and AUDIO IN jacks on the VCR with the supplied A/V cable by matching the connector types. This will allow you to make analogue stereo (two channel, right and left) recordings.

4 - 1

SOFTWARE VERSION CHECK AND UPGRADING

A.MPEG SOFTWARE VERSION CHECK

1.Press SYSTEM key (on the remote control) to open setup page,

TV Screen shows:

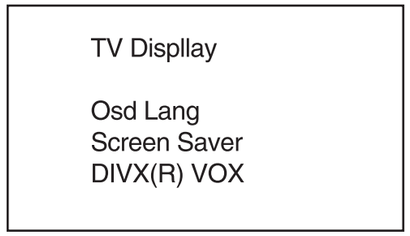

2.Press REMOVAL key (on the remote control) to the original setup page,

TV Screen shows:

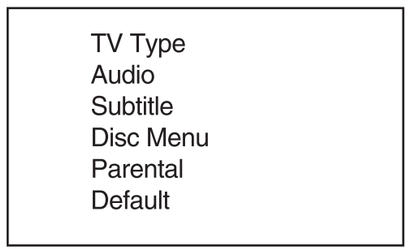

3.Enter the password "811502" (on the remote control)

TV Screen shows:

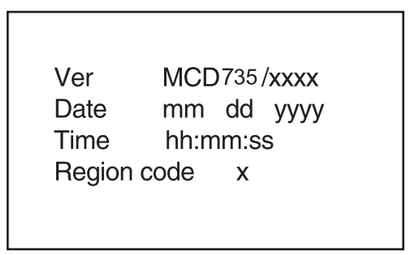

4. Press ▲ or ▼ button (on the remote control) to change region.
Press OK to confirm.

B.CPU VERSION CHECK

Keep PLAY/PAUSE and STOP buttons (on the set) depressed while pressing POWER on.

TV screen shows

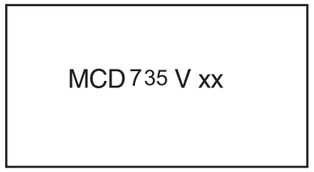

C. MPEG SOFTWARE UPGRADING

1. download the firmware from Philips support website
http://www.philips.com/support

2. Prepare a uploading CD

3. Put the CD in the CD tray

4. TV Screen shows

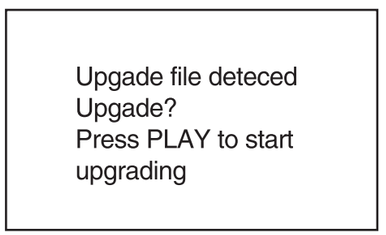

5 - 1

SET BLOCK DIAGRAM

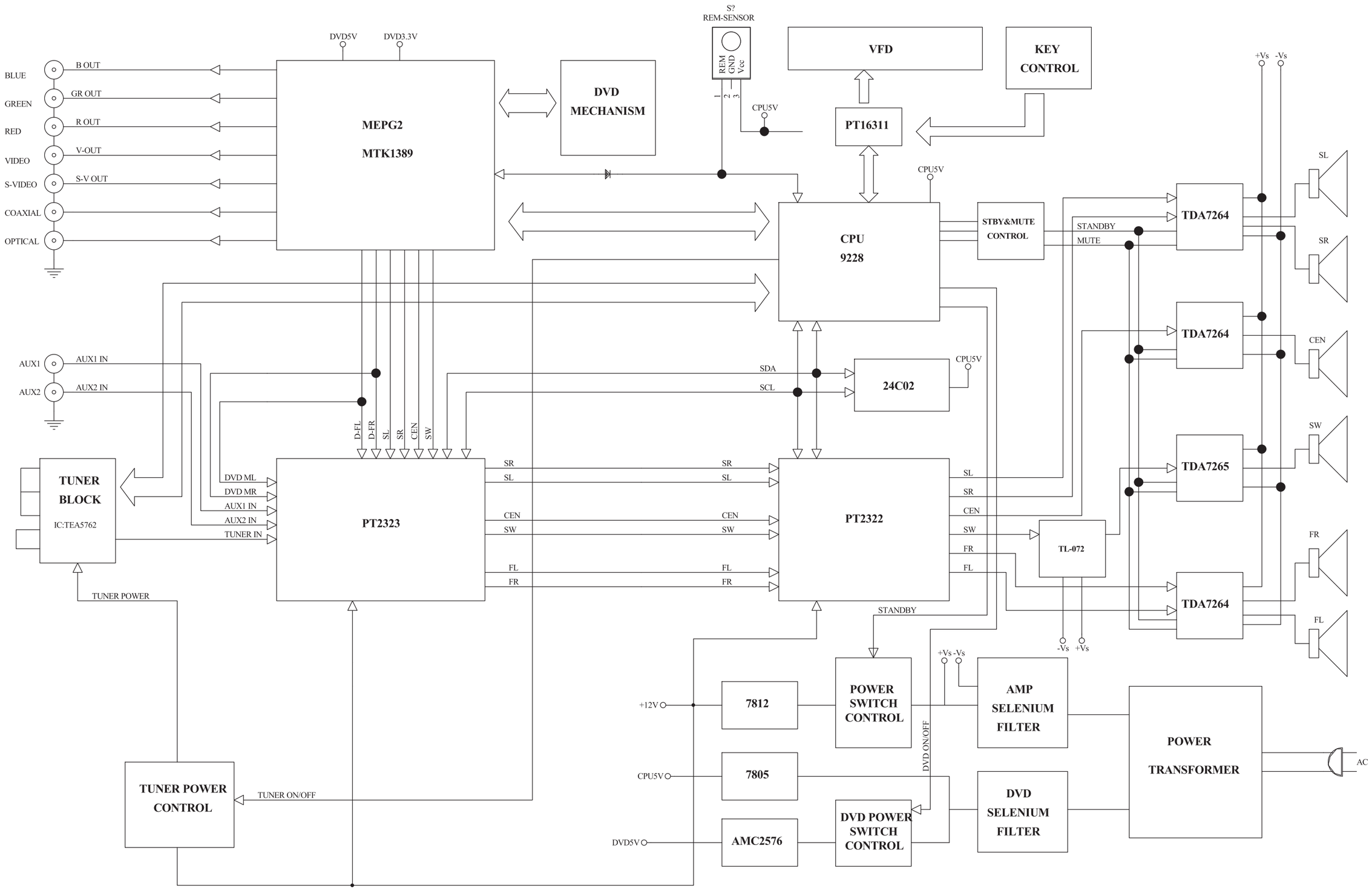

6 - 1

SET WIRING DIAGRAM

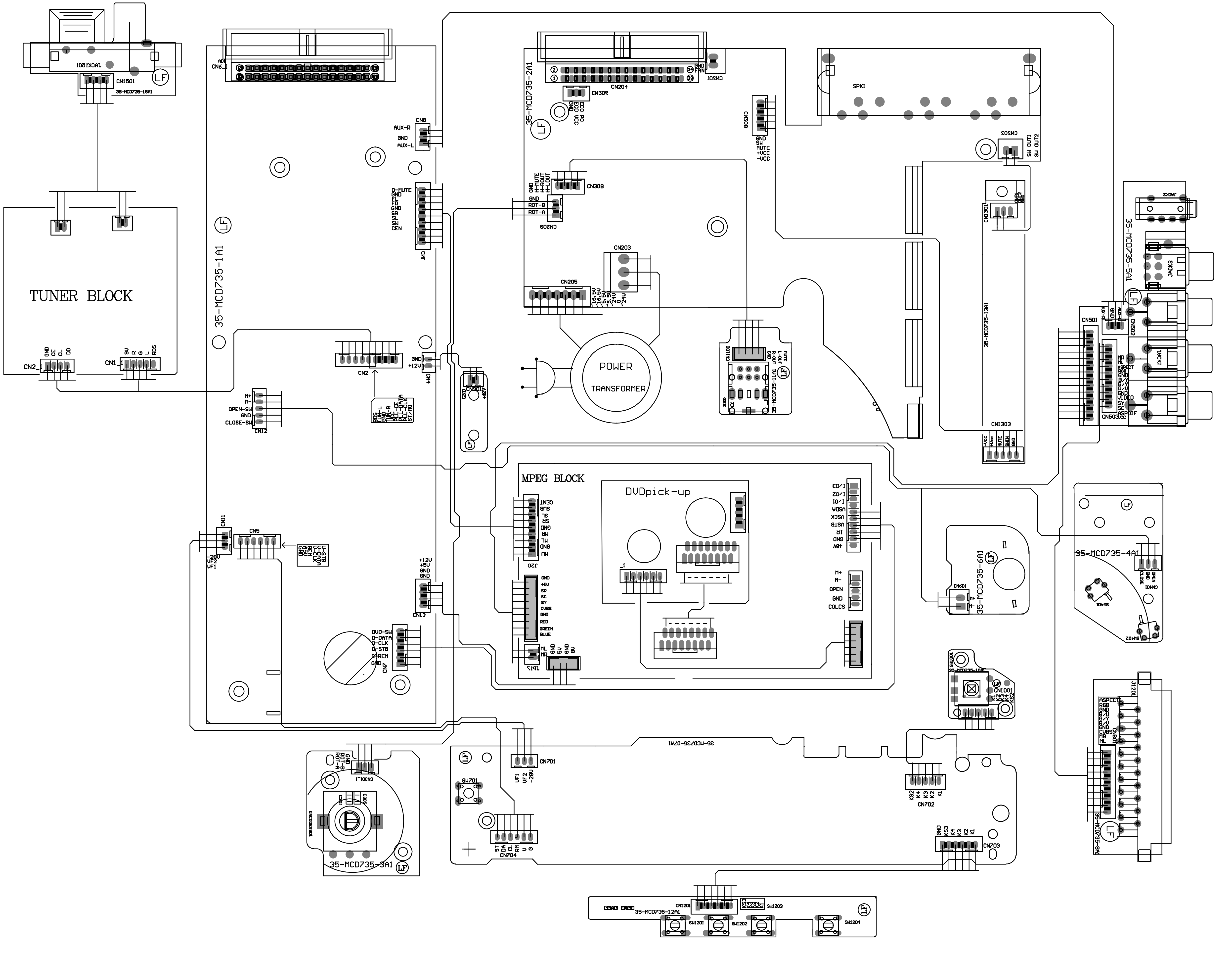

7 - 1

CIRCUIT DIAGRAM - ECO6-02 TUNER BOARD
(only for -/37)

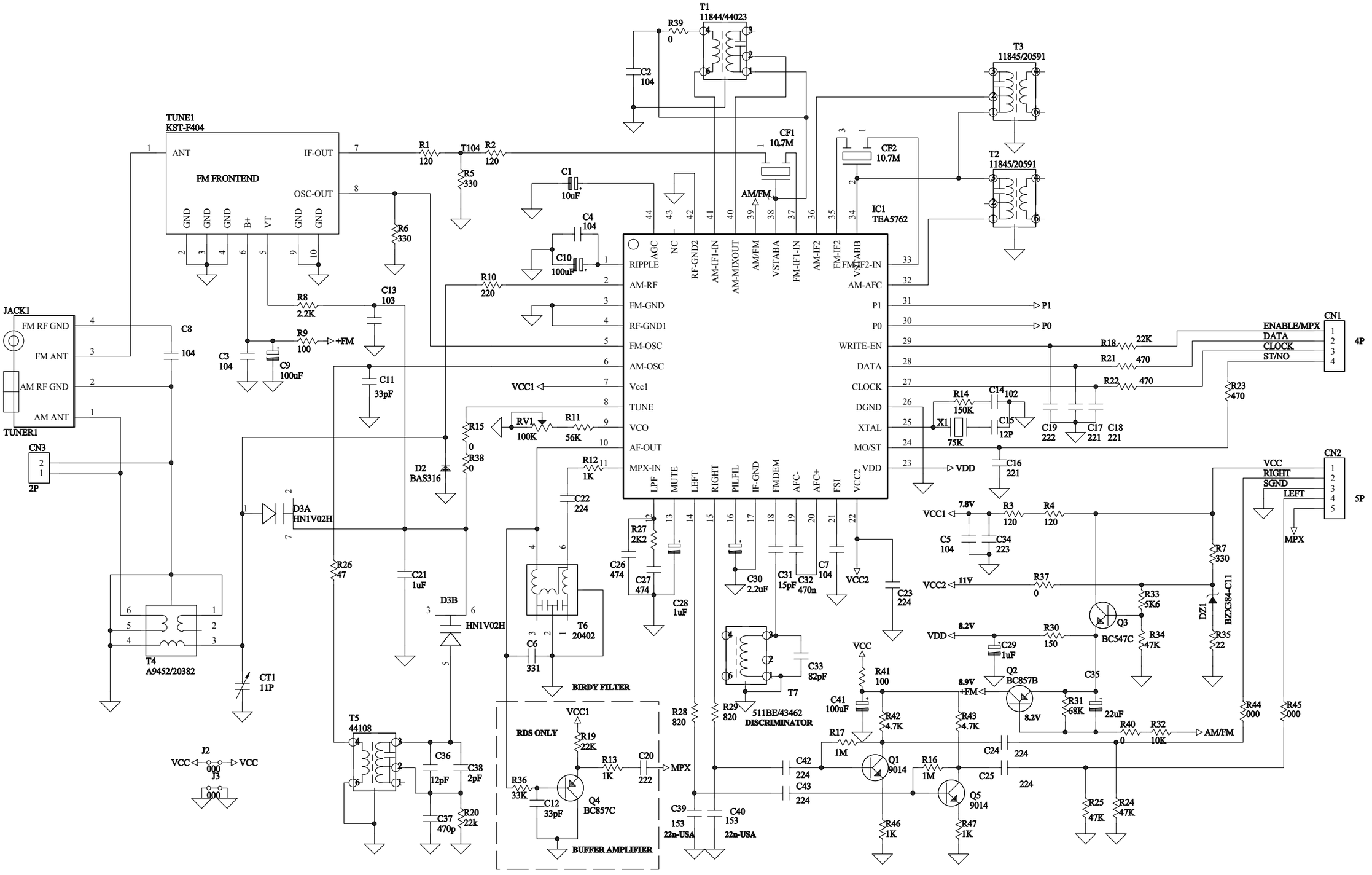

7 - 2

LAYOUT DIAGRAM - ECO6-02 TUNER BOARD
(only for -/37)

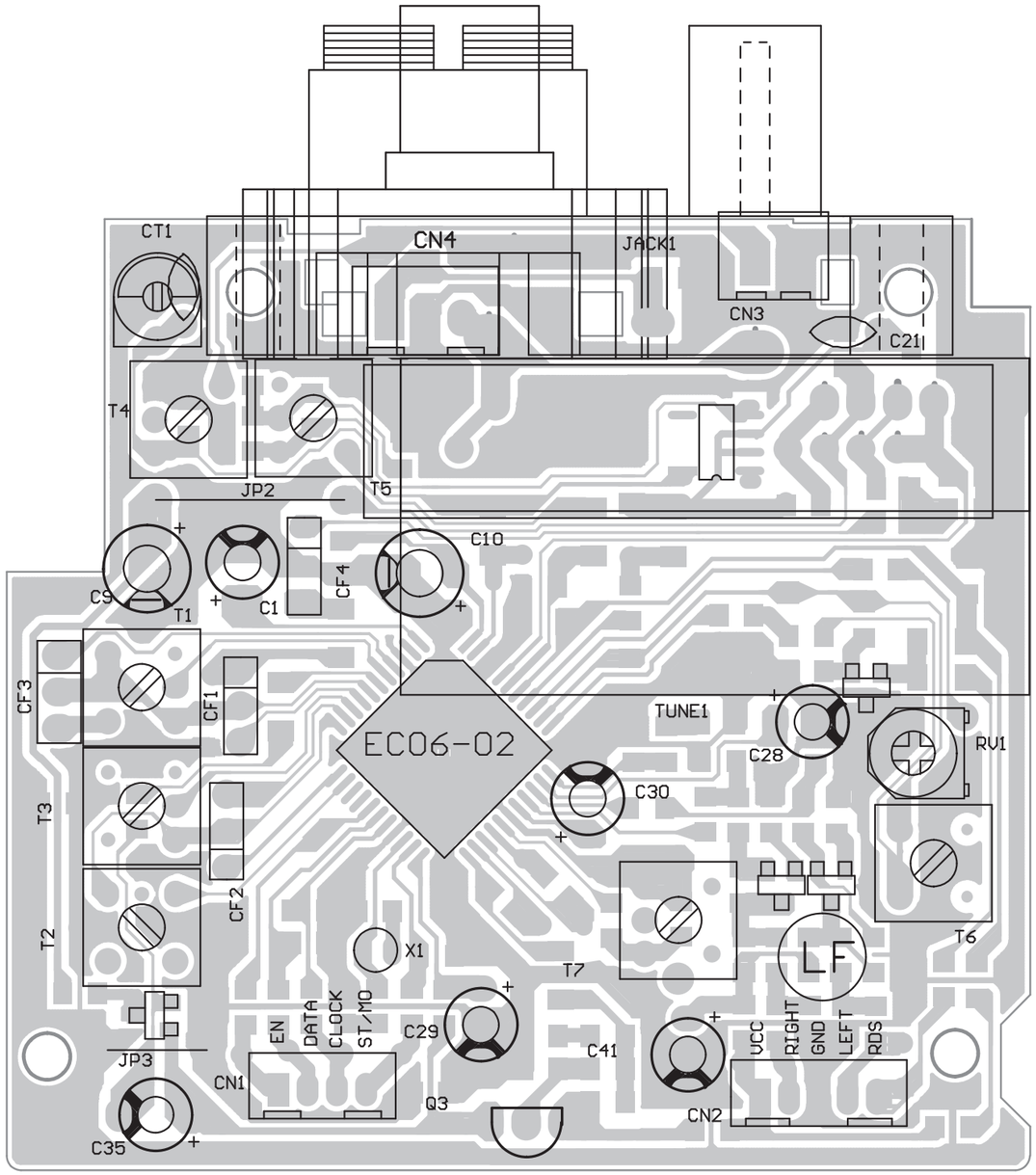

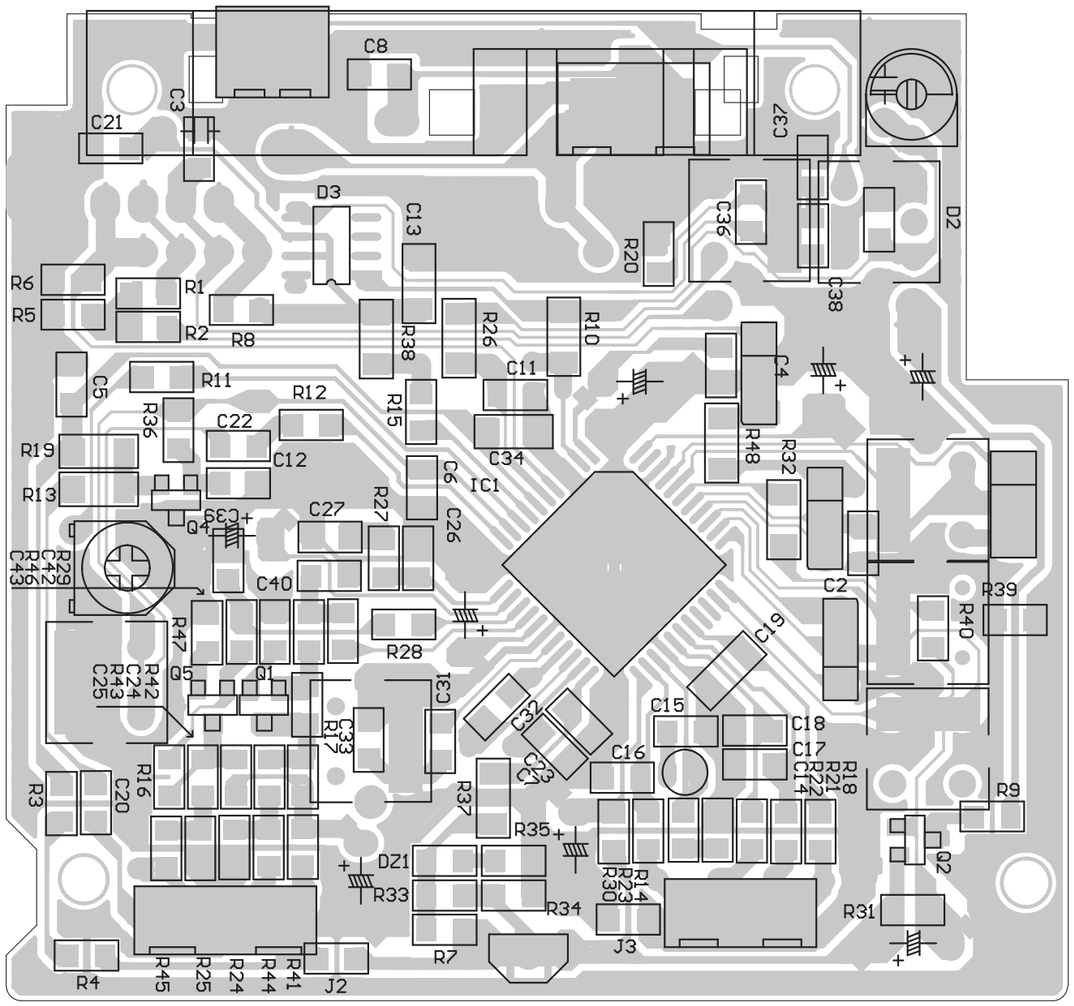

7 - 3

CIRCUIT DIAGRAM - ECO6-01 TUNER BOARD
(not for -/37)

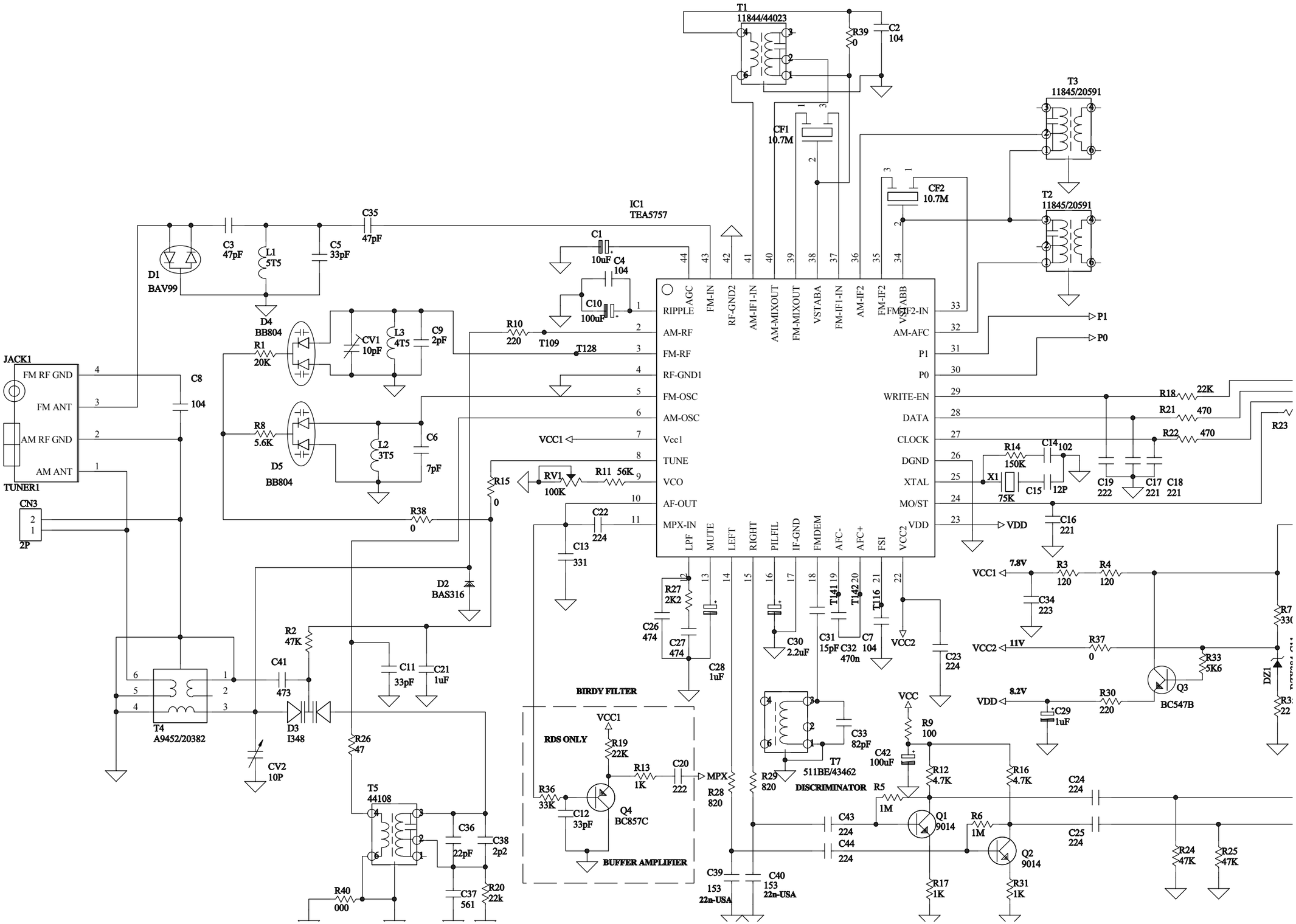

7 - 4

LAYOUT DIAGRAM - ECO6-01 TUNER BOARD
(not for -/37)

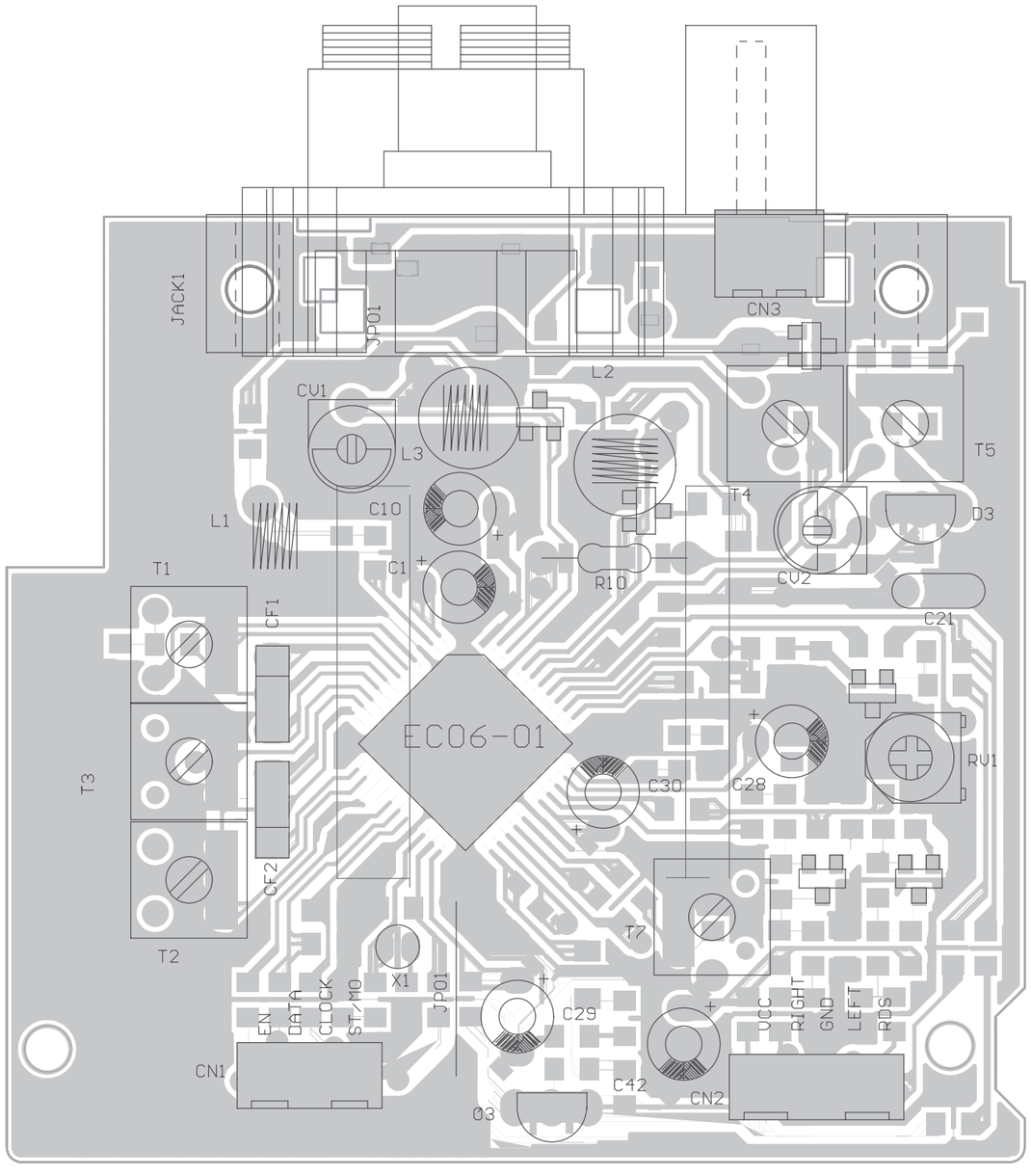

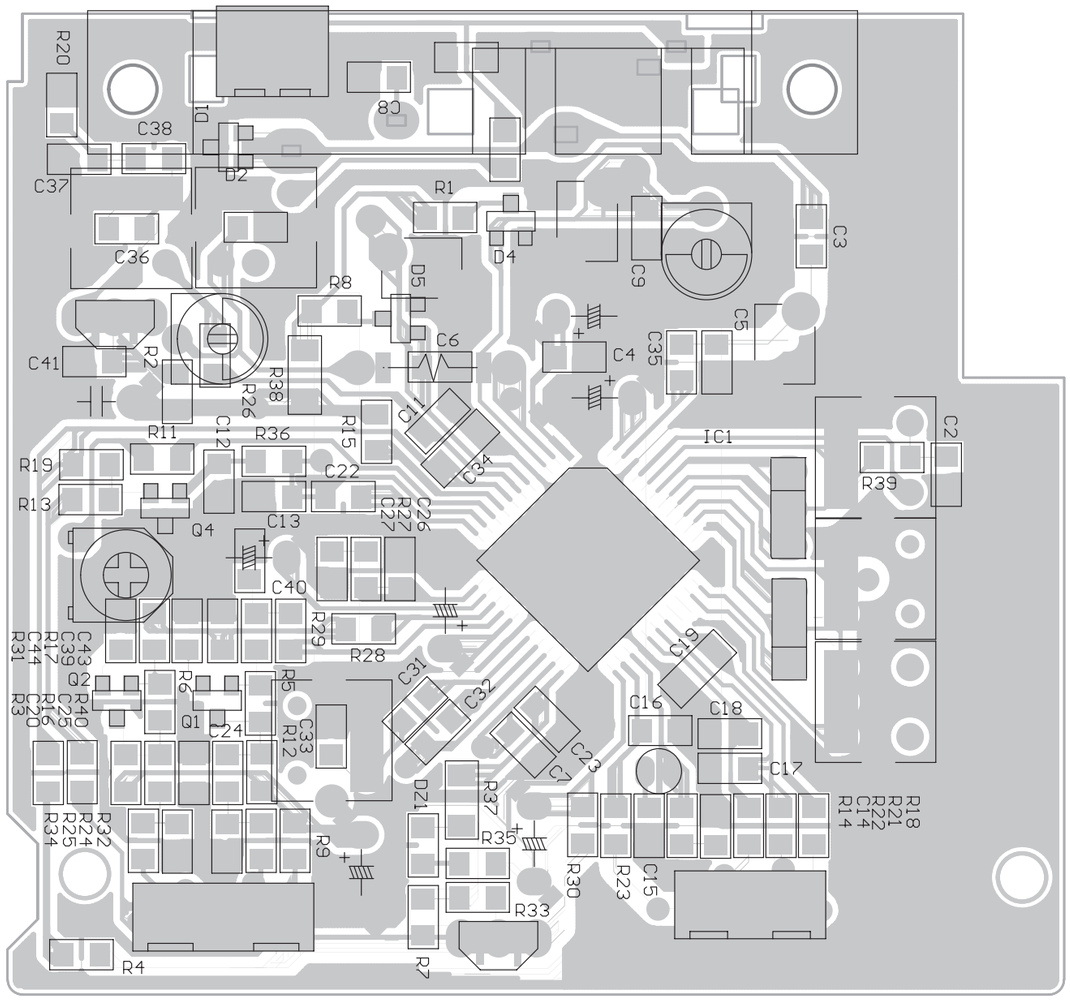

8 - 1

CIRCUIT DIAGRAM - VFD BOARD

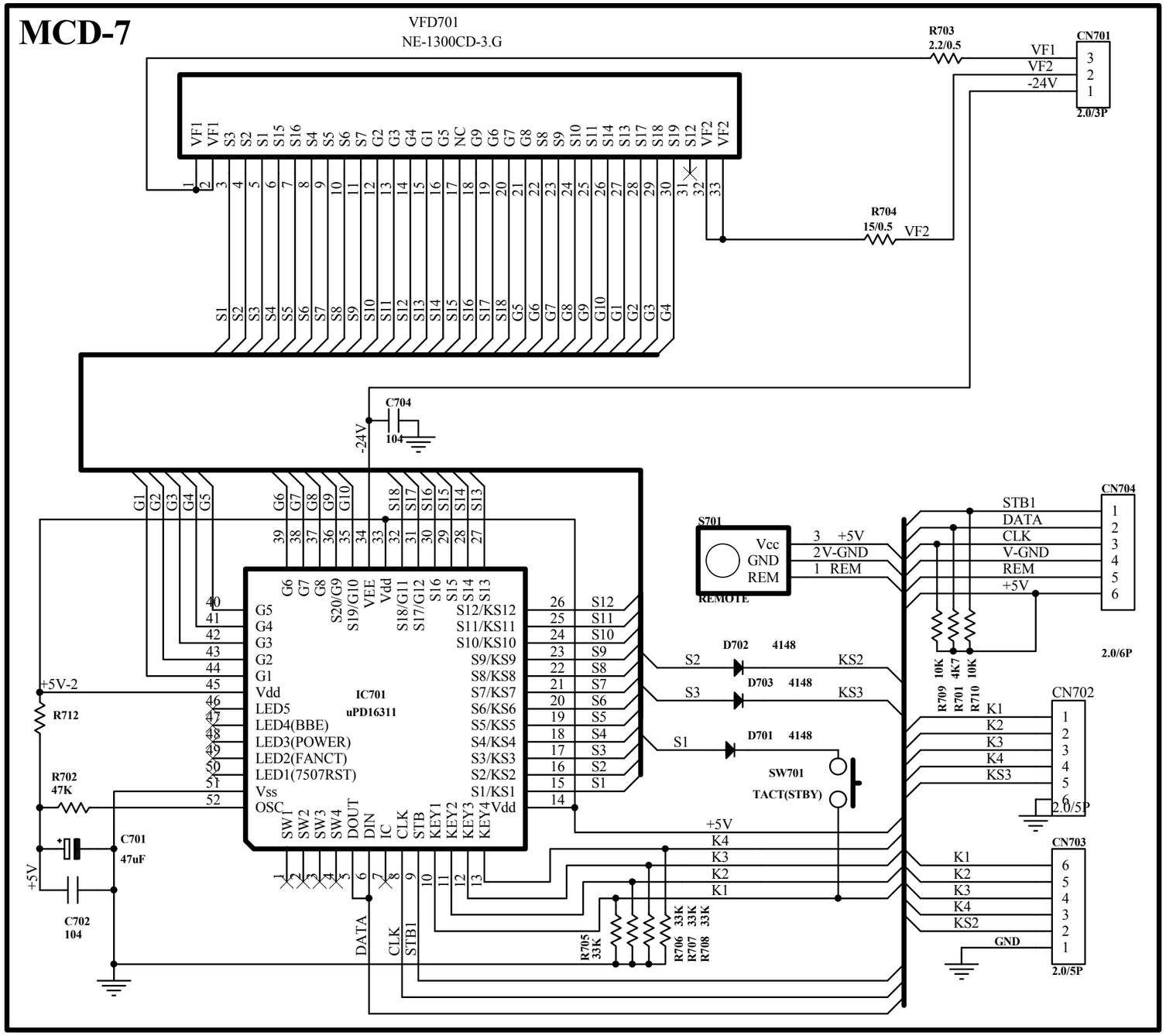

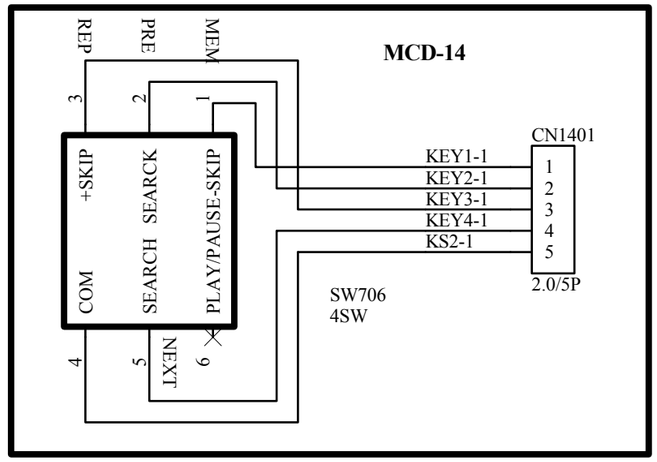

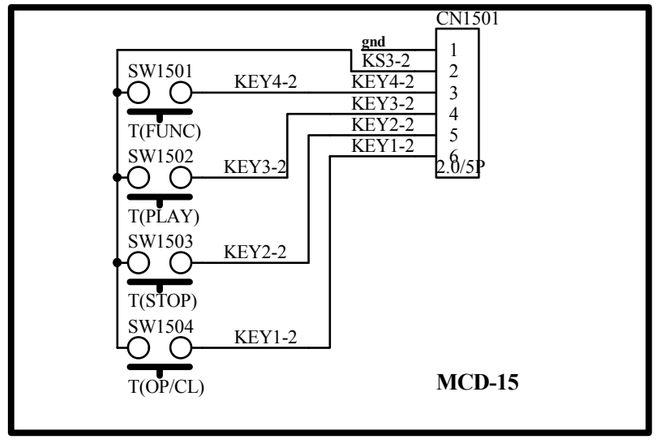

8 - 2

LAYOUT DIAGRAM - VFD BOARD

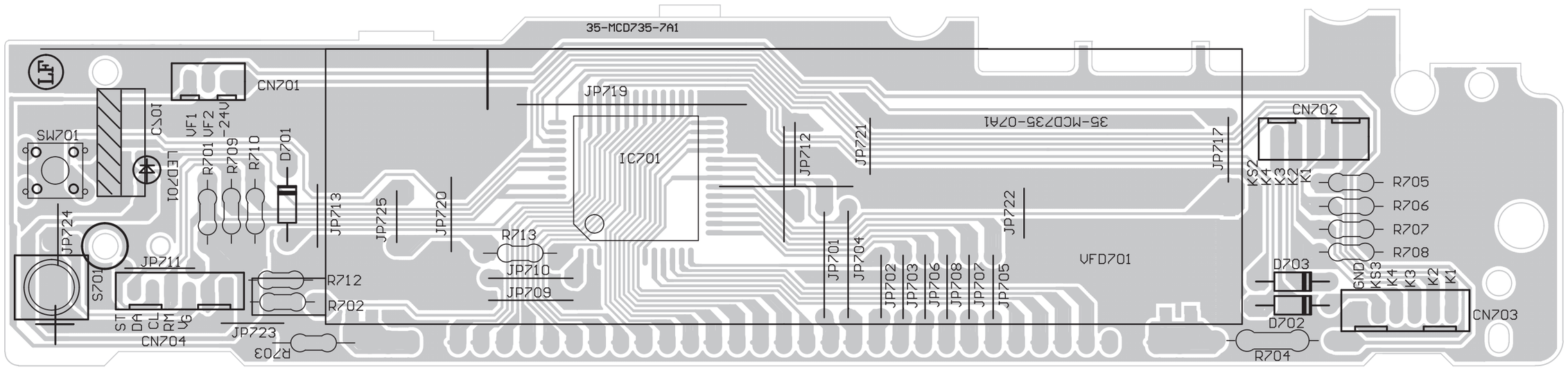

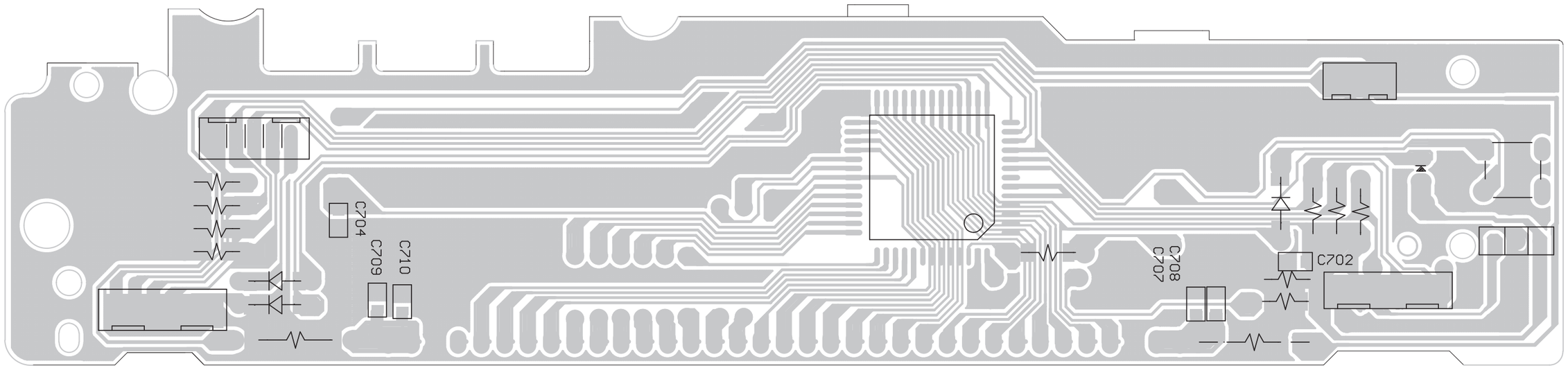

9 - 1

CIRCUIT DIAGARM - CPU BOARD

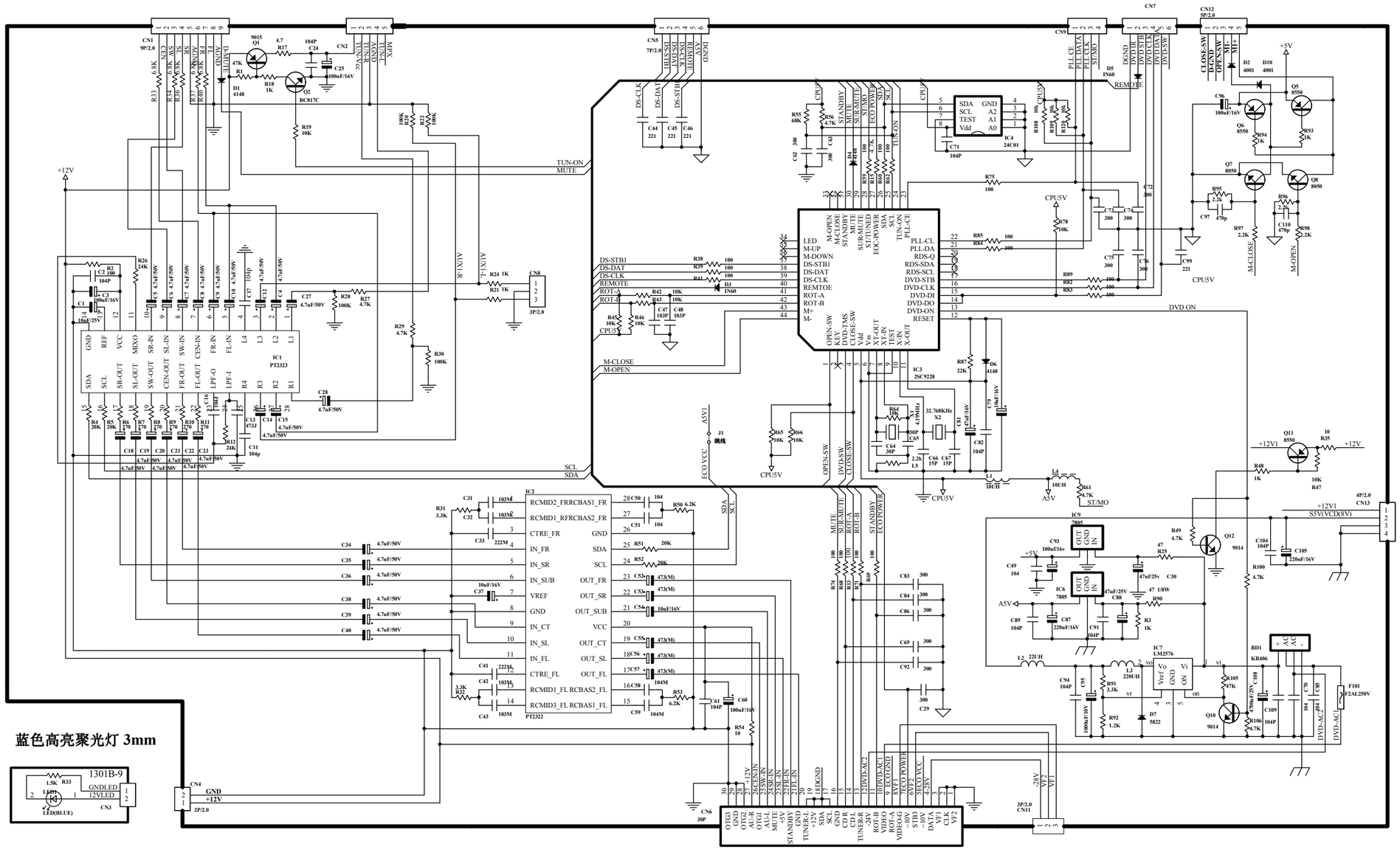

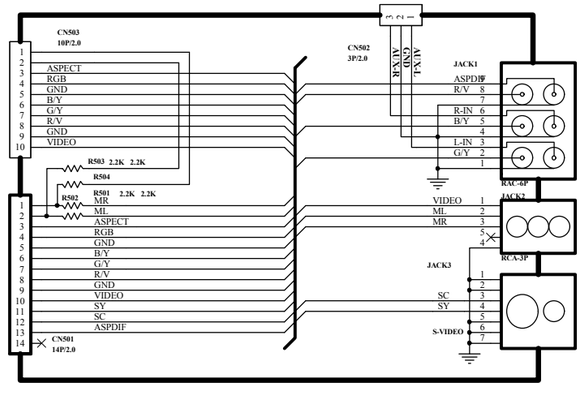

9 - 2

LAYOUT DIAGARM - CPU BOARD

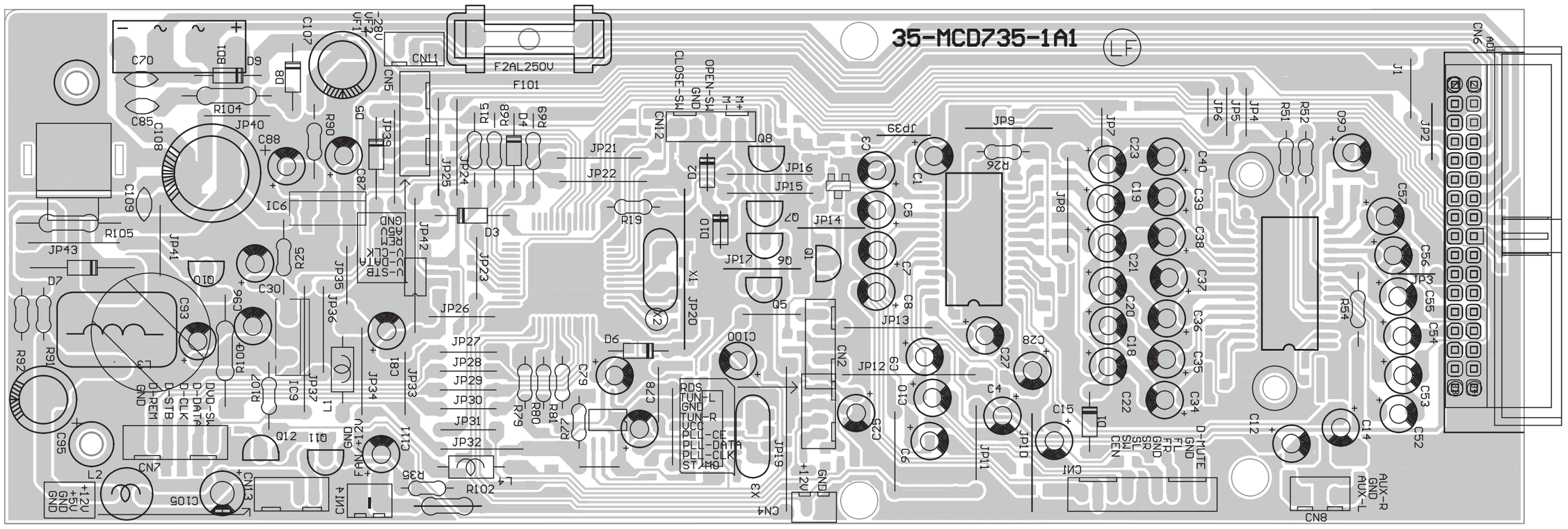

9 - 3

LAYOUT DIAGRAM - CPU BOARD

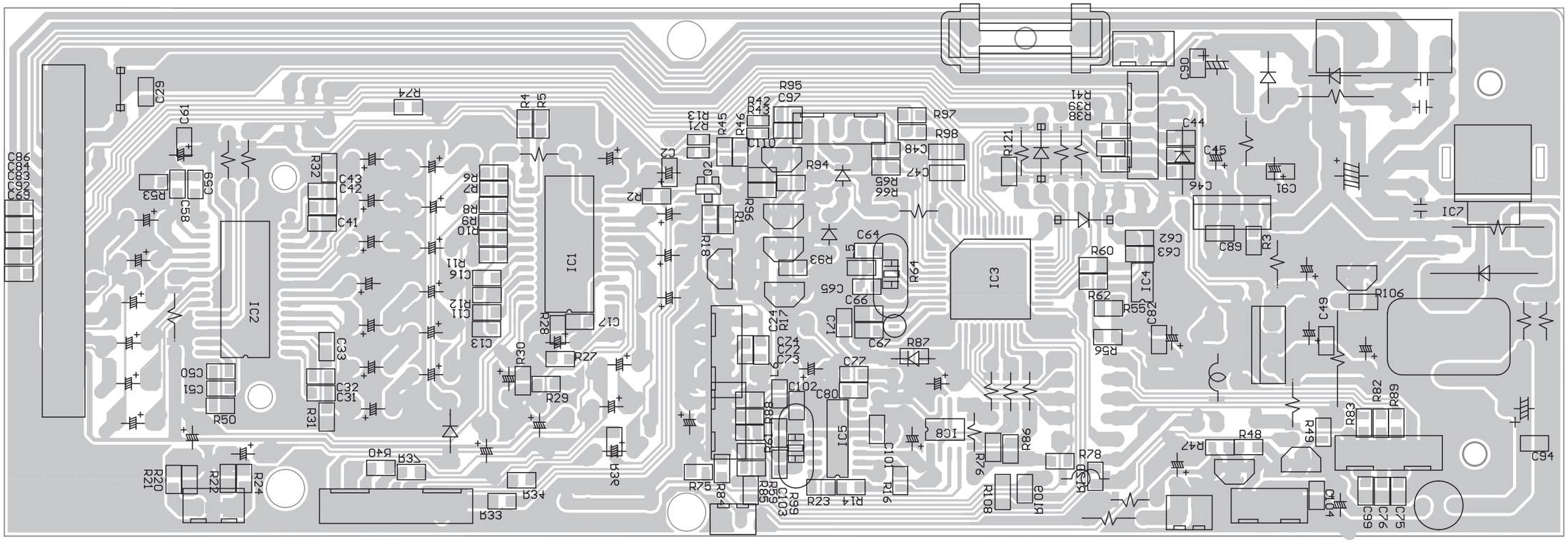

10 - 1

CIRCUIT DIAGRAM - AMP BOARD

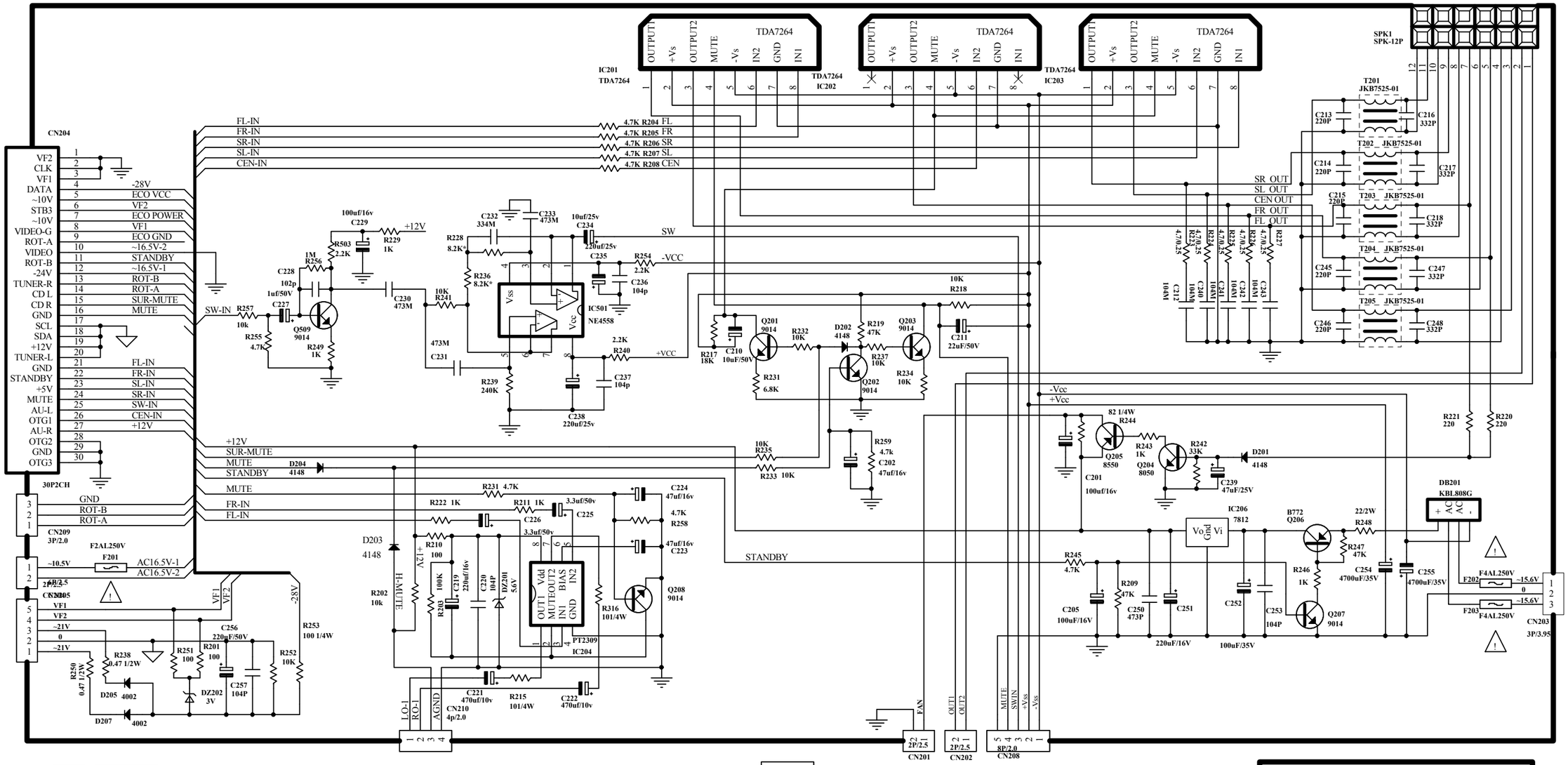

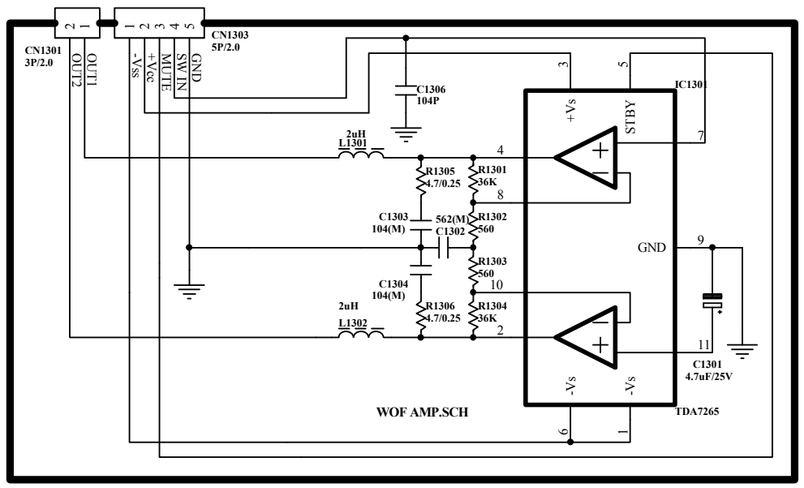

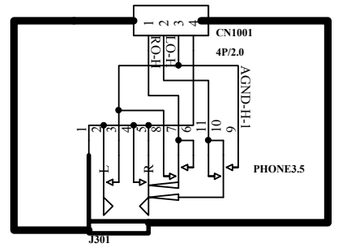

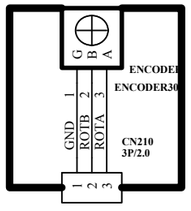

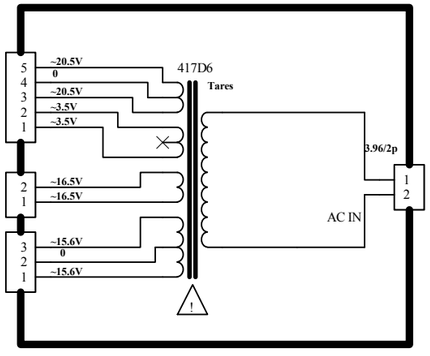

10 - 2

LAYOUT DIAGRAM - AMP BOARD

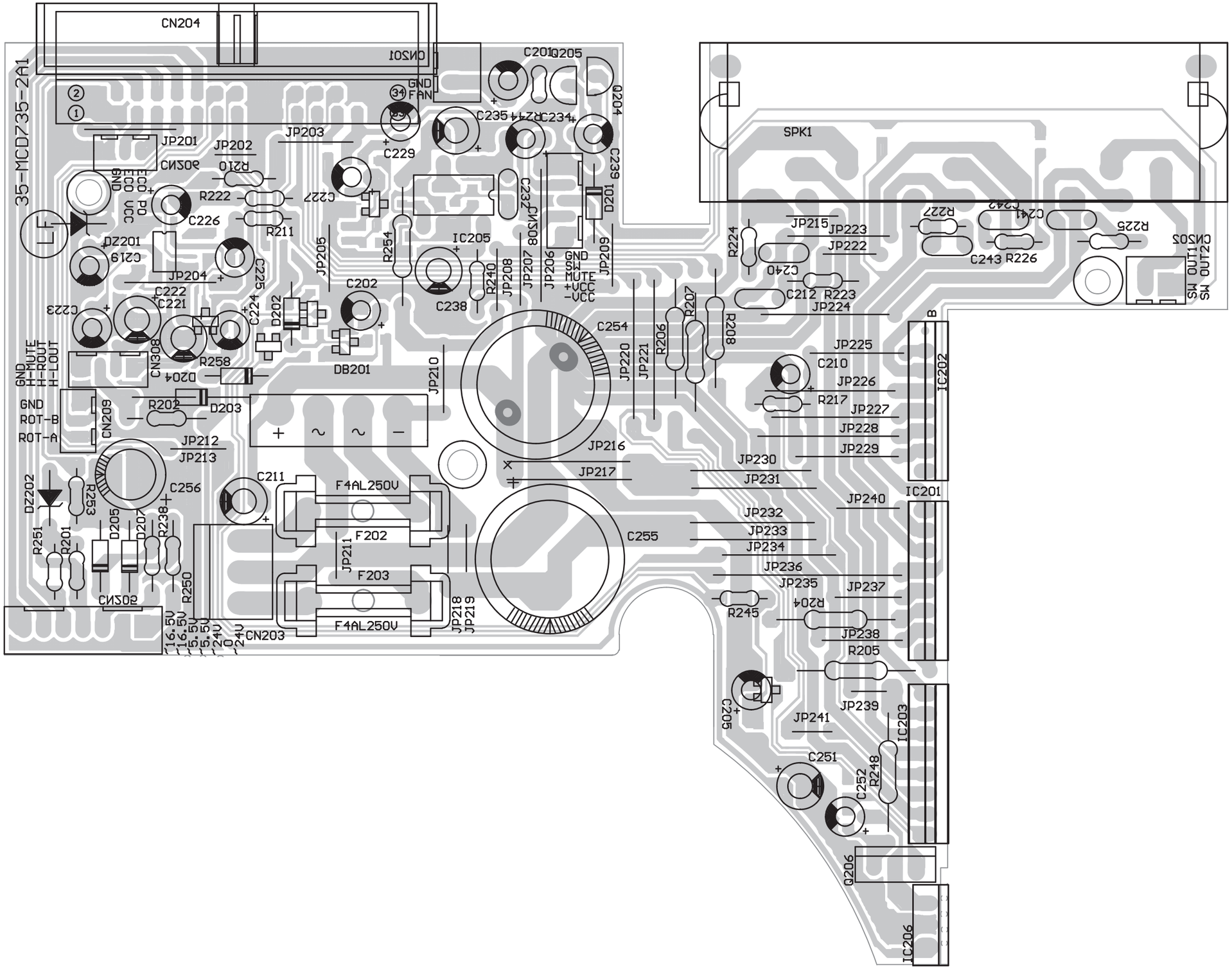

10 - 3

LAYOUT DIAGRAM - AMP BOARD

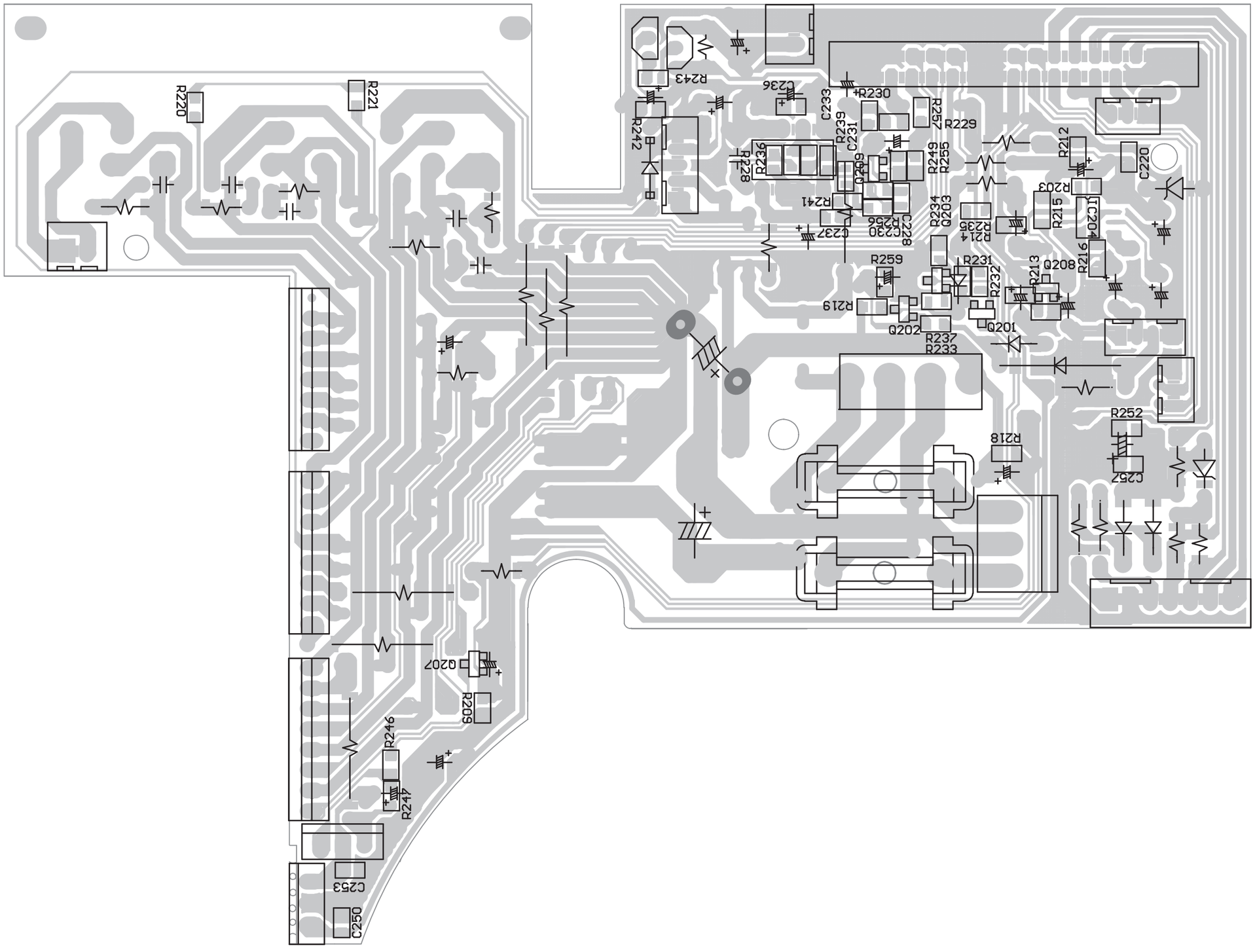

11 - 1

CIRCUIT DIAGRAM - DVD MPEG BOARD

MPEG board is not repaired,program for reference only.

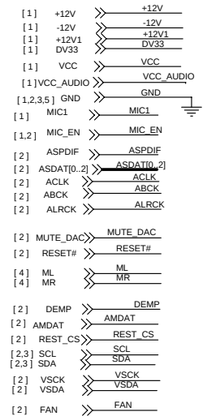

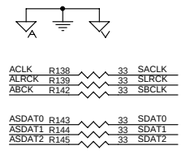

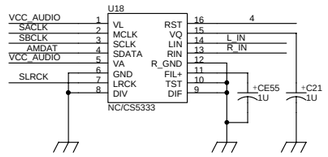

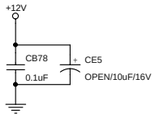

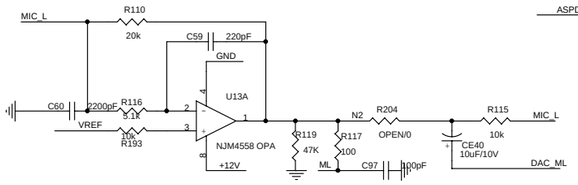

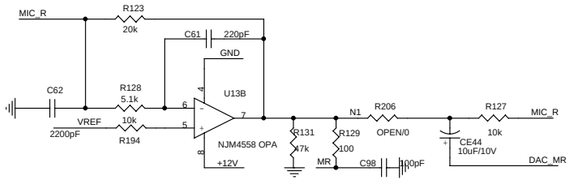

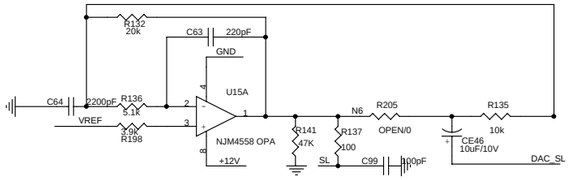

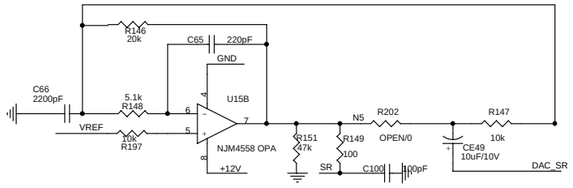

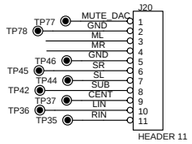

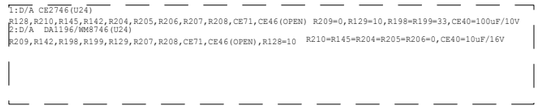

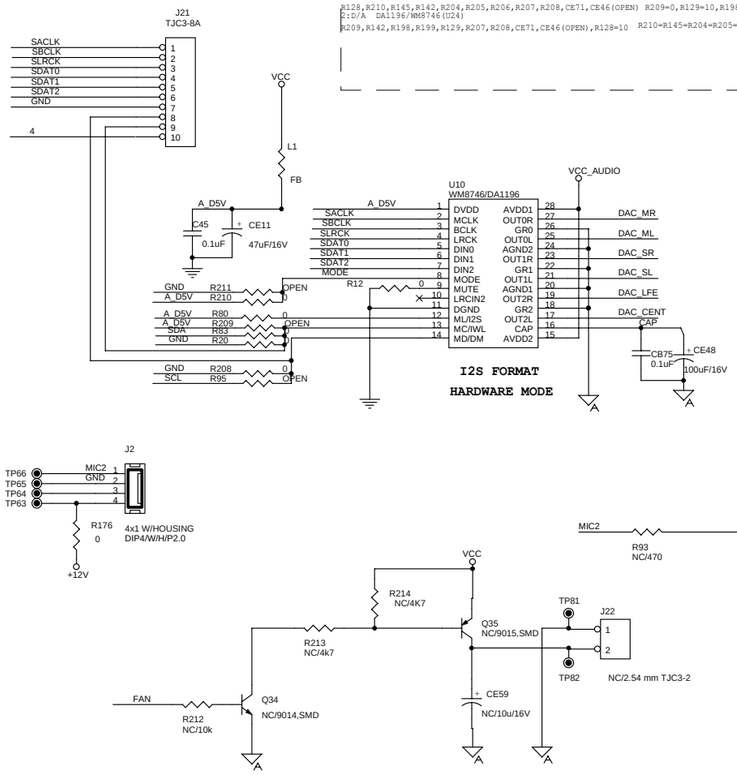

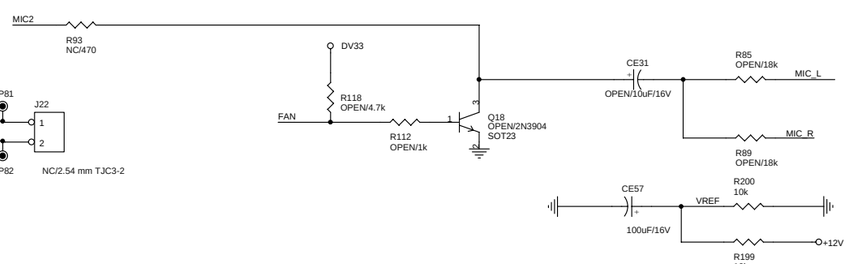

11 - 2

CIRCUIT DIAGRAM - DVD MPEG BOARD

MPEG board is not repaired,program for referrence only.

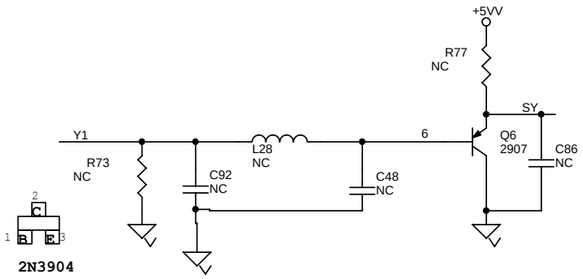

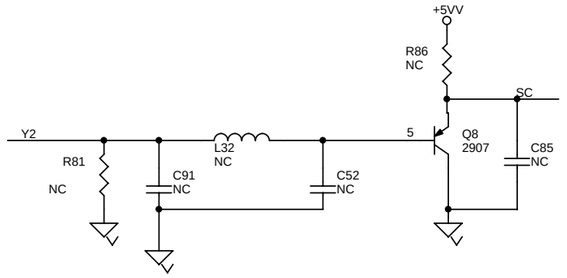

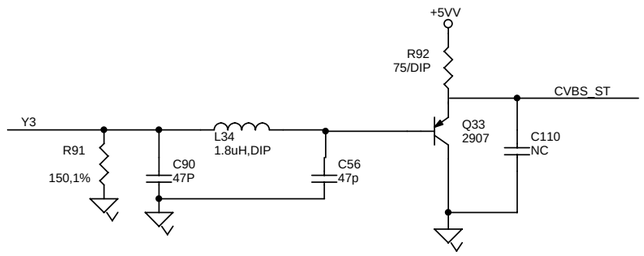

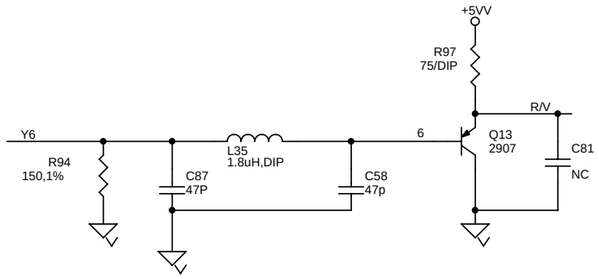

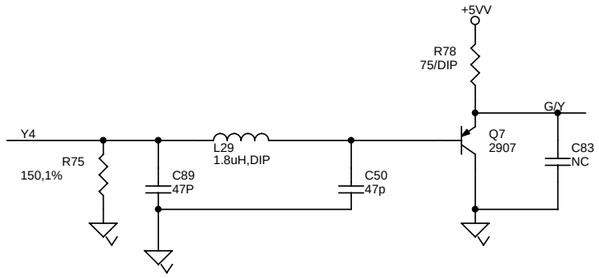

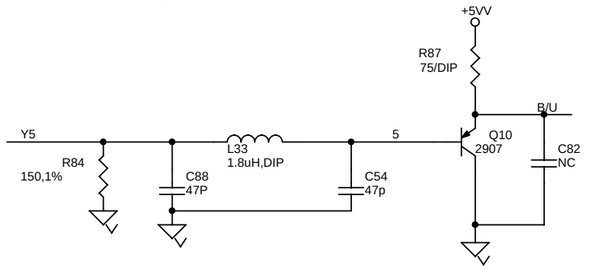

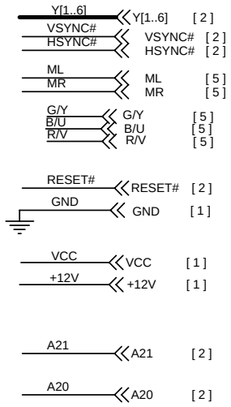

SCART CONNECTOR

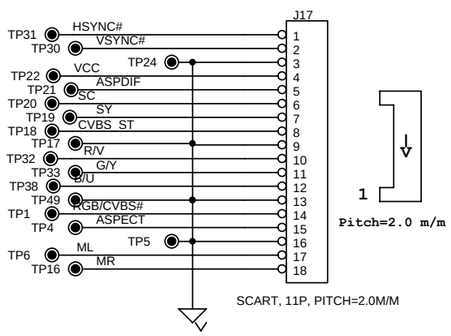

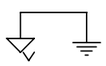

SCART CONTROL

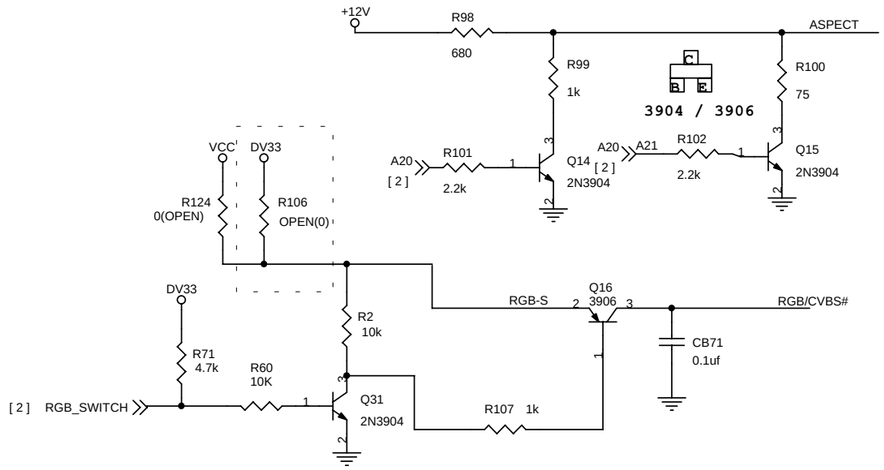

11 - 3

CIRCUIT DIAGRAM - DVD MPEG BOARD

MPEG board is not repaired,program for referrence only.

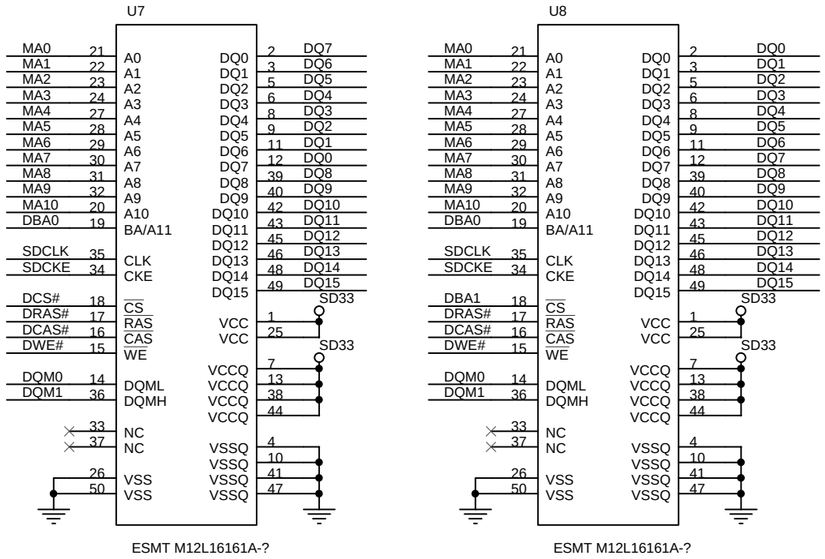

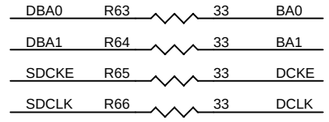

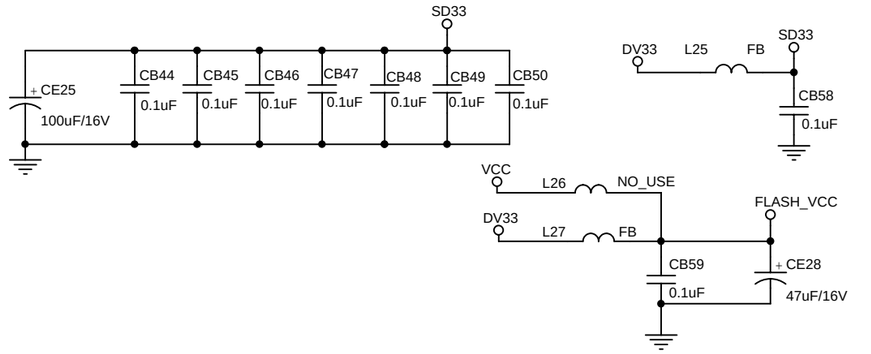

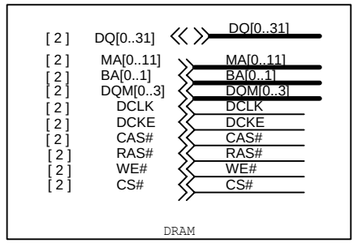

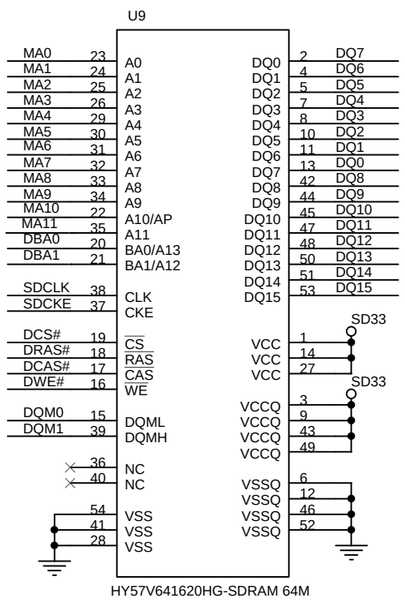

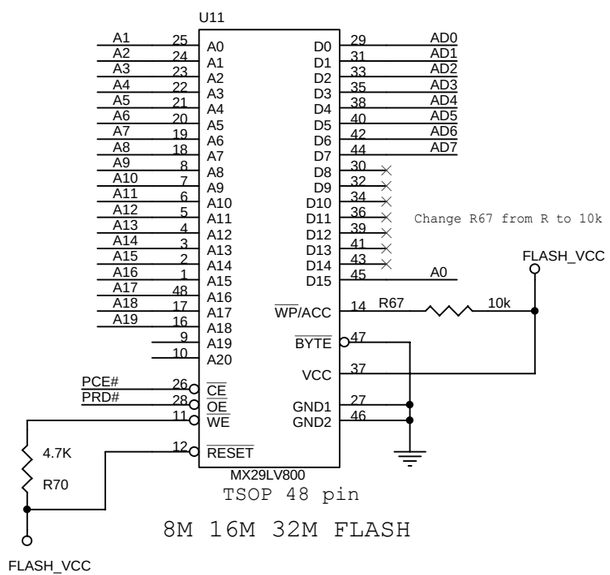

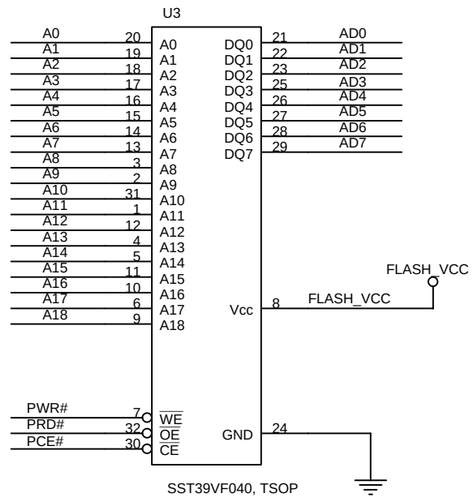

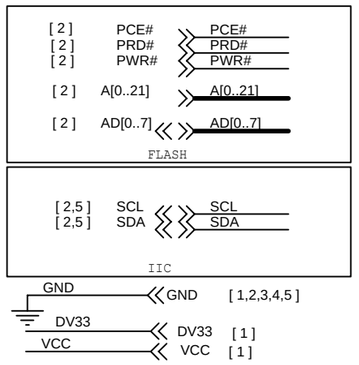

11 - 4

CIRCUIT DIAGRAM - DVD MPEG BOARD

MPEG board is not repaired,program for referrence only.

1 INDEX & POWER, RESET
2 RF, SERVO & MPEG - MT1389E
3 MEMORY - SDRAM, FLASH/EEPROM
4 VIDEO OUT
5 AUDIO DAC WMA8746&WMA8720 AND AUDIO OUT

Rev	History	P#	Date
V1	**The original released.**		2003.6.15
V2	Change CE11 from 10uF to 100uF	1	2003.7.17
	Change C3 from C to 2200pF	2	
	Change C2 from 0.1uF to C	2	
	Change R10,r15 from 750k to 680k	2	
	Change R17,R19 from 390k to 150k	2	
	Add C74 2200pF	2	
	Change R37 from 0 to R	2	
	Change R38 from 0 to R	2	
	Change C32 from 15nF to C	2	
	Change PIN 47 from LIMIT to ADIN	2	
	Add CE1 10uF	2	
	Change R15 from 1.5k to 1.8k	2	
	Remove 74H04	2	
	Change the LIMIT singalfrom PIN 46 to PIN136	2	
	Change R4,R5,R6,R8,R12 from 1k to R	2	
	Chang the TRIN&TROUT pullhigh power from 5V to 3V3	2	
	Add LC circuit	2	
	Change R67 from R to 10k	3	
	Add the low resistance output circuit	4	
	Change spdif output port	5	
	Add the Audio DAC power to reference filtering	5	

NAME	TYPE	DEVICE
VCC	Digital 5V	SUPPLY
DV33	Digital 3.3V	MT1389E
RFV33	Servo 3.3V	MT1389E
LDO_AV33	Laser Diode 3.3V	
AVCC	RF 5V	PICKUP HEADER
V18	Digital 1.8V	MT1389E
SD33	Digital 3.3V	SDRAM
+12V	Audio +12V	OP AMP.
-12V	Audio -12V	OP AMP.
AVDD	Audio 5V	Audio DAC
DVDD	Audio 5V	Audio DAC

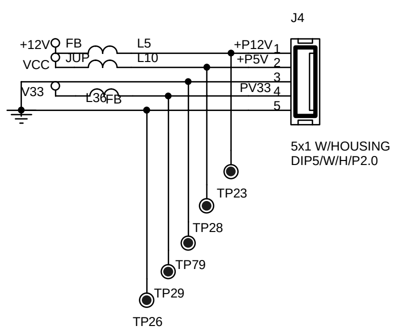

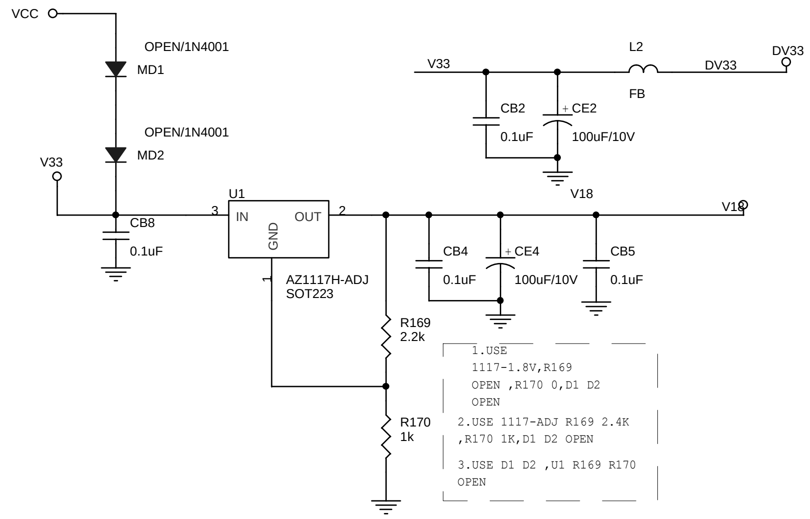

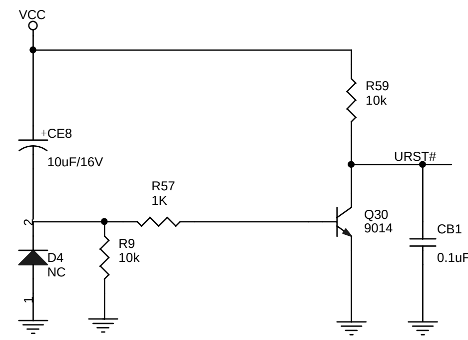

Power ON alive source

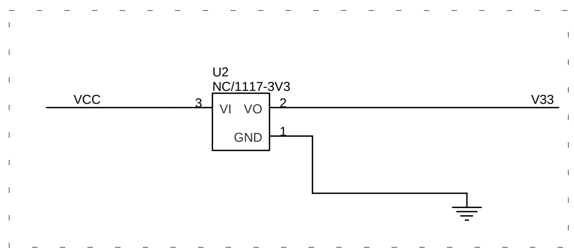

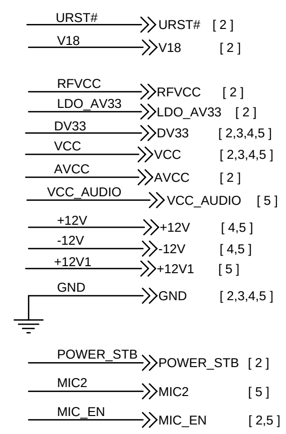

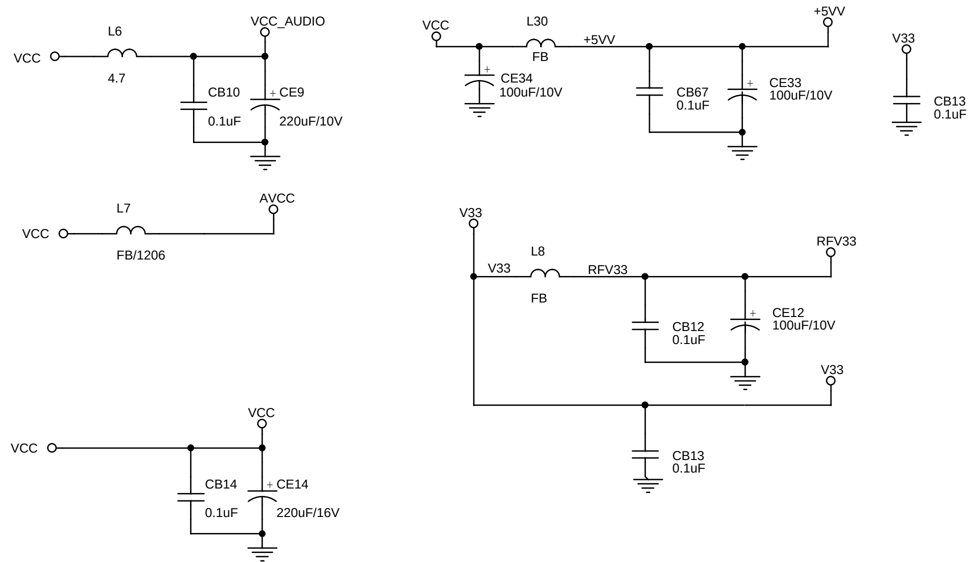

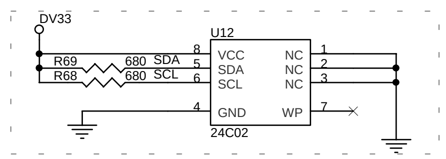

11 - 5

CIRCUIT DIAGRAM - DVD MPEG BOARD

MPEG board is not repaired,program for referrence only.

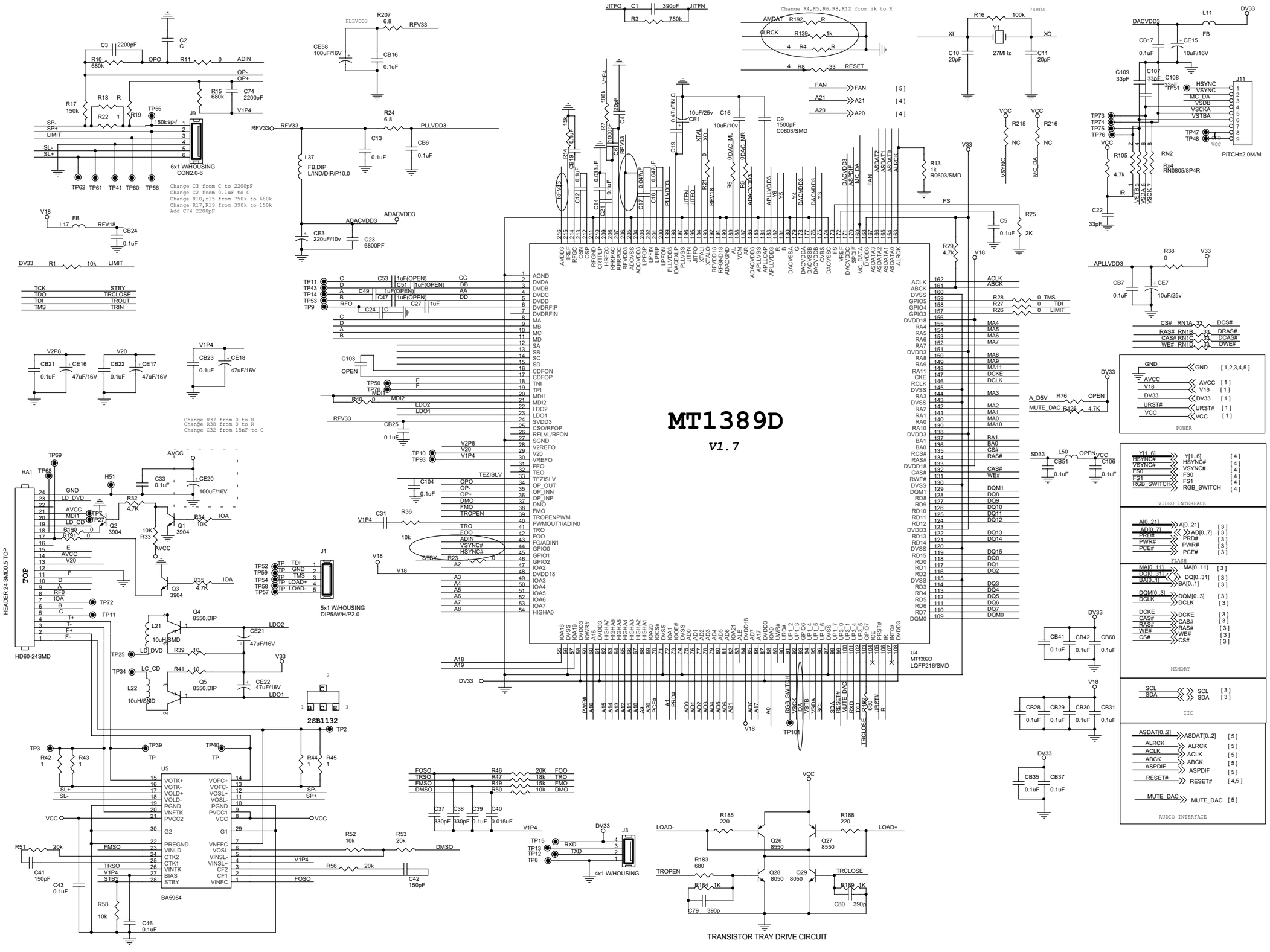

11 - 6

LAYOUT DIAGRAM - DVD MPEG BOARD

MPEG board is not repaired,program for referrence only.

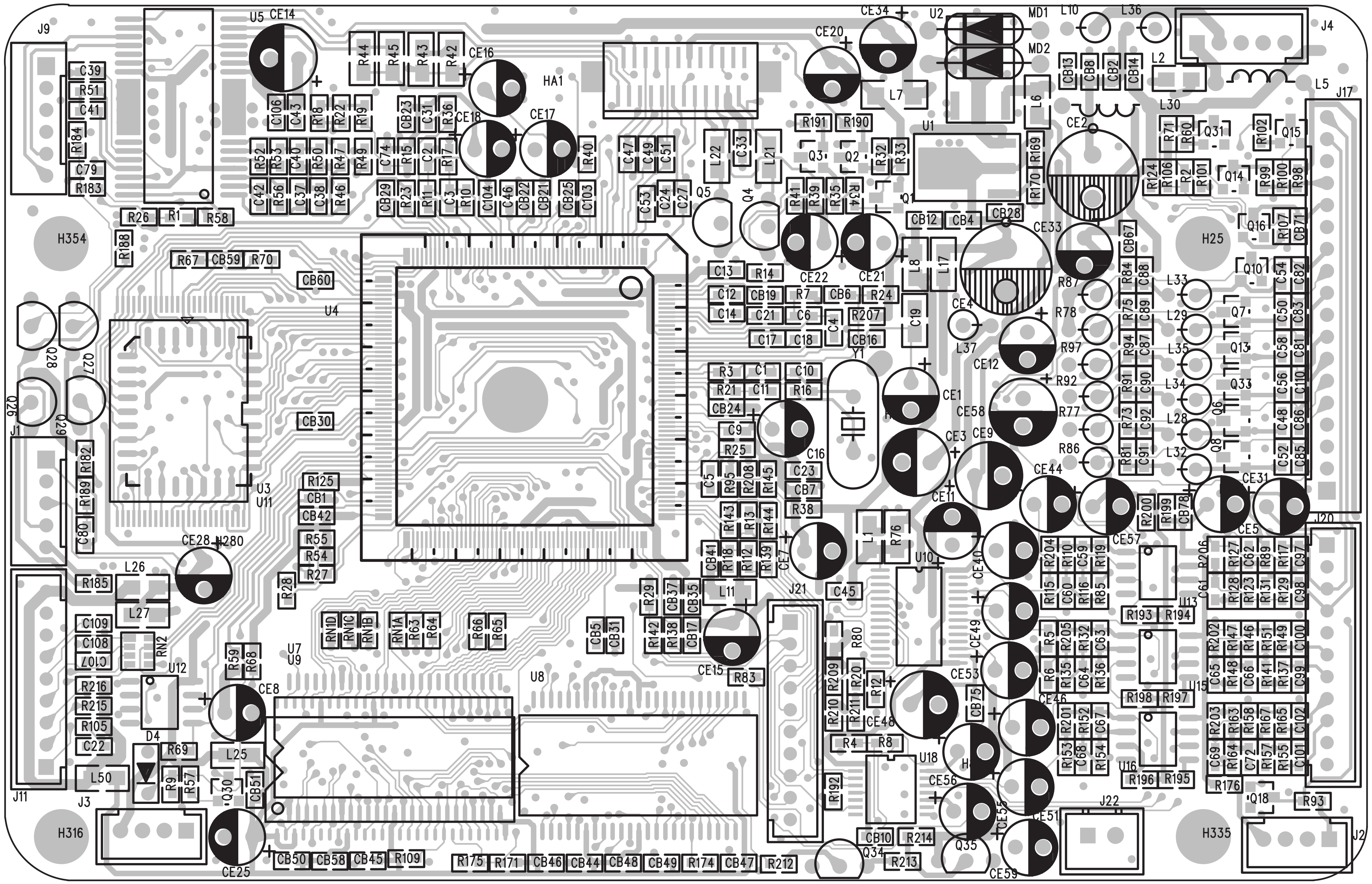

EXPLODED VIEW DIAGRAM

12 - 1

EXPLODED VIEW DIAGRAM

AMP PART

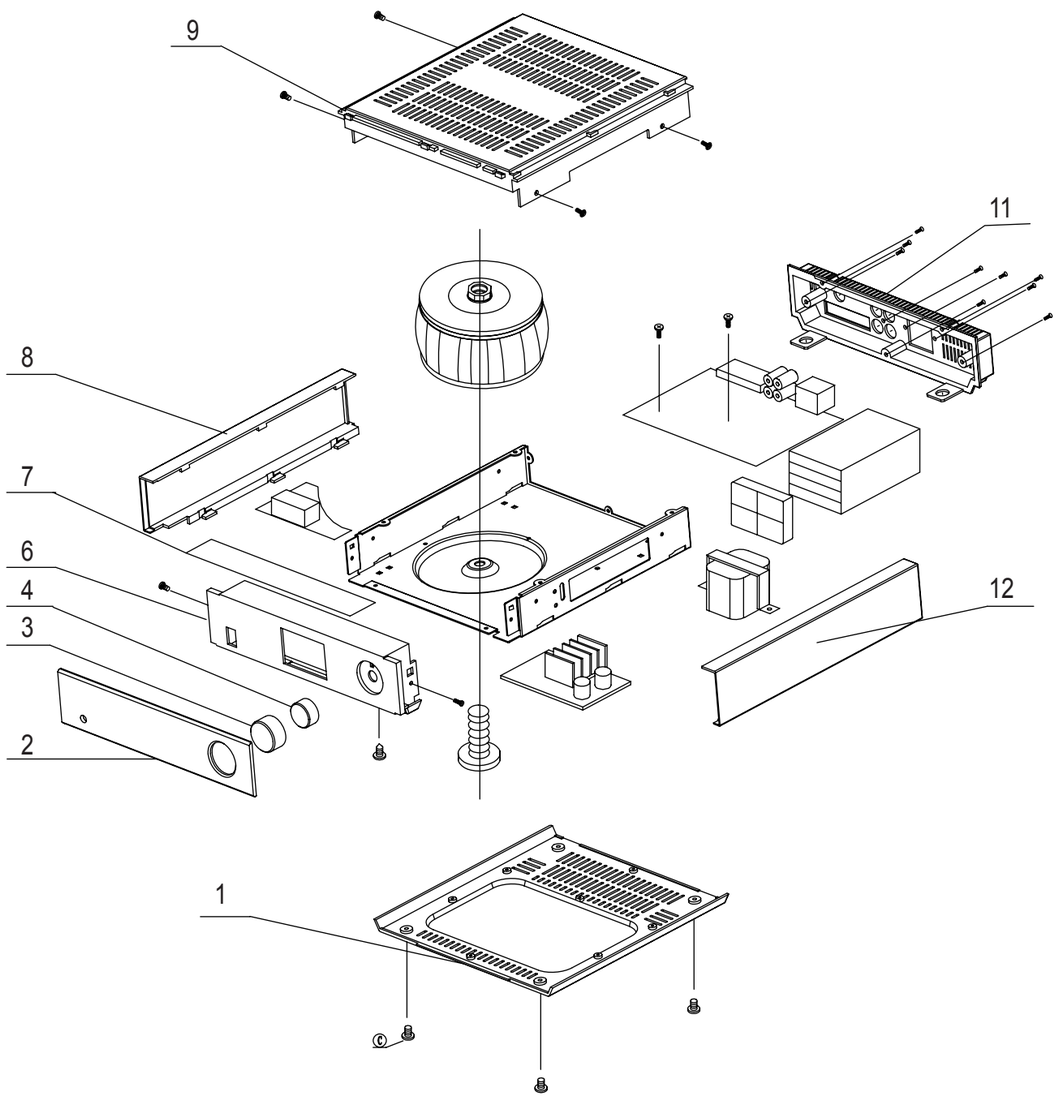

DVD PART

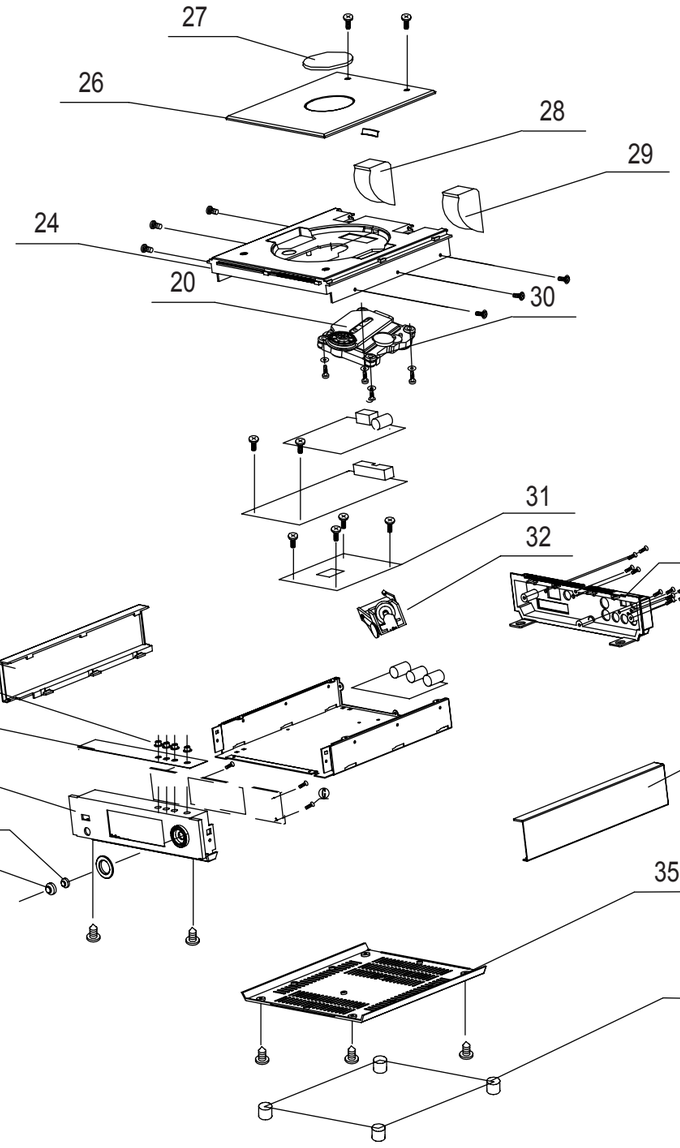

ACCESSORIES

	9965 000 41994	ENCIRCIE SPEAKER BOX (L) (for -/93)
	9965 000 42098	ENCIRCIE SPEAKER BOX(L) (for -/98)
	9965 000 41995	ENCIRCIE SPEAKER BOX(R) (for -/93)
	9965 000 42102	ENCIRCIE SPEAKER BOX(R) (for -/98)
	9965 000 41996	CENTER SPEAKER BOX (for -/93)
	9965 000 42099	CENTER SPEAKER BOX (for -/98)
	9965 000 41997	SUPER WOOFER SPEAKER BOX (for -/93)
	9965 000 42100	SUPER WOOFER SPEAKER BOX (for -/98)
	9965 000 41998	FRONT SPEAKER BOX (L) (for -/93)
	9965 000 42101	FRONT SPEAKER(L)(for -/98)
	9965 000 41999	FRONT SPEAKER BOX (R) (for -/93)
	9965 000 42103	FRONT SPEAKER BOX(R)(for -/98)
	9965 000 41023	REMOTE CONTROL ASS'Y PRC502-02 (for -/93/37)
	9965 000 42104	REMOTE CONTROL PRC502-02(for -/98)
	9965 000 41027	ENCIRCLE SPEAKER LEFT BOX(for -/37)
	9965 000 41026	CENTER SPEAKER BOX ASS'Y(for -/37)
	9965 000 41025	SUPER WOOFER SPEAKER BOX ASS'Y(for -/37)
	9965 000 41024	FRONT SPEAKER LEFT BOX(for -/37)
⚠	9940 000 03187	AC LINE CORD
	9940 000 04886	AV CABLE (W/D3.5X1 & RCAX3)
	9965 000 41018	FM ANTENNA WIRE 1.5M
	9940 000 04178	CONTROL CABLE 30P L=300MM(for -/93/98)
	9965 000 41019	CONTROL CABLE WIRE 300 2.5/30P(for -/37)
	9965 000 41020	SPEAKER CORDS 8M
	9965 000 41615	ANTENNA HOLDER ASS'Y AM(for -/93/98)
	9965 000 41021	ANTENNA HOLDER ASS'Y NE1300(for -/37)
	9965 000 41022	BRACKET ASS'Y PH MCD700

MECHANICAL PARTSLIST

AMP PART

1	9965 000 41980	CABINET BOTTOM (for -/93)
1	996500042096	AMP CABINET BOTTOM (for -/98)
2	9965 000 41981	AMP UNIT LENS DISPLAY
3	9940 000 02496	VOLUME KNOB
4	9940 000 02501	OVERLAY FOR VOLUME KNOB
6	9965 000 41982	AMP CABINET FRONT
7	9940 000 02502	CAB. TOP PLATE
8	9965 000 42075	SIDE PLATE-L HIPS ASH
9	9965 000 41983	AMP CABINET TOP
11	9965 000 41984	AMP CABINET BACK
12	9965 000 42076	SIDE PLATE-R HIPS ASH

12 - 2

MECHANICAL PARTSLIST

DVD PART

13	9965 000 41985	DVD LENS DISPLAY
14	9940 000 02497	POWER BOTTON
16	9940 000 02495	SWITCH PUSH KNOB
17	9940 000 02505	FUNCTION KNOB RING
18	9965 000 41986	DVD CABINET FRONT
19	9940 000 02503	DVD UNIT PUSH KEY PLATE
20	9965 000 41987	DVD MECHA.SONY KHM-313AHC
21	9940 000 02506	OVERLAY FOR FUNCTION KNOB
22	9940 000 02494	CAB. TOP PUSH KEY KNOB
23	9965 000 42075	SIDE PLATE-L HIPS
24	9965 000 41988	DVD CABINET TOP
26	9940 000 02485	DVD DOOR
27	9940 000 02504	DVD DOOR DECOATIVE SHEET
28	9965 000 41989	CD DOOR LEFT BRACKET
29	9965 000 41990	CD DOOR RIGHT BRACKET
30	9940 000 03455	DVD MECHA.SHOCKPROOF WASHER
31	9965 000 41991	DECODER CARD ASS'Y MCD735/93
31	9965 000 42097	DECODER CARD ASS'Y MCD735/98
32	9940 000 02491	WORM PREFORMING ASS'Y SET
33	9965 000 41992	DVD CABINET BACK
34	9965 000 42076	SIDE PLATE-R HIPS
35	9965 000 41993	CABINET BOTTOM
36	9940 000 05081	RUBBER FOOT
	9940 000 03499	FLAT FLEX CABLE 24P

Note: Only these parts mentioned in the list are normal service parts.

ELECTRICAL PARTSLIST - DVD PART

- MISCELLANEOUS -

SW401	9940 000 02536	SPECIAL SWITCH TC-V030A
SW402	9940 000 02536	SPECIAL SWITCH TC-V030A
SW1201	9940 000 02555	LIGHT TOUCH SWITCH
SW1202	9940 000 02555	LIGHT TOUCH SWITCH
SW1203	9940 000 02555	LIGHT TOUCH SWITCH
SW1204	9940 000 02555	LIGHT TOUCH SWITCH
SW706	9940 000 02557	SWITCH(4-DIRECTIONS)
	9940 000 02541	VFD DISPLAY NE-700D-3.WR
S701	9940 000 02542	IR SENSOR
SW701	9940 000 02543	LIGHT TOUCH SWITCH
X1	9940 000 02551	CRYSTAL OSC FREQ. 32.768 KHZ
X1	9940 000 03452	QUARTZ CRYSTAL 75KHZ D3.0
X2	9940 000 03152	CERMIC FILTER FREQUENCY 4.19MHz
CN7	9965 000 41002	SPEAKER SOCKET DJ-270-DH-03
CN5	9965 000 41002	SPEAKER SOCKET DJ-270-DH-03
F101 ⚠	9940 000 02529	FUSE F2AL250V
JP818 ⚠	9940 000 03412	FUSE F1.5A/125V (for -/93)
JP818 ⚠	9965 000 42106	FUSE F1.5A/125V (for -/98)
JK1501	9965 000 42013	ANT. LEADING-OUT TERMINAL
	9940 000 05068	DOOR SWITCH
	9940 000 02487	WORM & WORM WHEEL BRACKET
JAK501	9965 000 42015	6P RCA SOCKET
JAK503	9940 000 04982	S-VIDEO OUTPUT SOCKET
JAK502	9940 000 04944	AV OUT SOCKET 4P
	9965 000 42018	EC06-01 TUNER PCB ASS'Y
	9965 000 42019	CPU PCB ASS'Y MCD735/93/98
	9965 000 41028	DVD BRICK ASSY MCD735/37

- DIODES -

D1	9940 000 03764	DIODE BAV99
D2	9940 000 03759	DIODE BAS316
DZ1	9940 000 03761	ZENER DIODE BZX384-C11 11V
D3	9940 000 03762	VARIODE DIODE I348
D4	9940 000 03763	VARIODE DIODE BB804
D5	9940 000 03763	VARIODE DIODE BB804
D3	9940 000 03714	DIODE IN60 L=52MM
D5	9940 000 03714	DIODE IN60 L=52MM
D7	9940 000 02544	RECTIFIER DIODE IN5822
BD1	9940 000 02521	THYRISTOR RS406(4A)
LED1	9940 000 02537	LED (BLUE) 3R4CB71D-2B-208
LED701	9940 000 05215	LED DIODE RED

- COILS & FILTERS -

T7	9940 000 05137	I.F.T. COIL BROWN 6295
T5	9940 000 05138	I.F.T. COIL BROWN 6296
T2	9940 000 05139	I.F.T. COIL BROWN 6298
T3	9940 000 05139	I.F.T. COIL BROWN 6298
T1	9940 000 05141	I.F.T. COIL BROWN 6298
T4	9940 000 05142	I.F.T. COIL BROWN 6299
CF2	9940 000 03153	FM CER. FILTER FREQUENCY 10.7MHz
CF1	9940 000 03153	FM CER. FILTER FREQUENCY 10.7MHz

ELECTRICAL PARTSLIST - DVD PART

- IC & TRANSISTORS -

Q11	9940 000 02519	TRANSISTOR 8550C
Q10	9940 000 02545	TRANSISTOR 9014C
Q12	9940 000 02545	TRANSISTOR 9014C
Q1	9940 000 03441	TRRANSISTOR 9015C
Q2	9940 000 03439	CHIP RESISTOR BC817-25
Q1	9940 000 03156	CHIP TRANSISTOR 9014
Q2	9940 000 03156	CHIP TRANSISTOR 9014
Q4	9940 000 03442	CHIP TRANSISTOR BC857C
Q3	9940 000 03438	TRANSISTOR BC547B
Q601	9940 000 02519	TRANSISTOR 8550C
IC2	9965 000 42008	IC PT2322 SOP
IC1	9965 000 42010	IC PT2323 SOP
IC7	9940 000 02546	IC YD2576-ADJ
IC4	9940 000 02547	IC AT24C02-PC27(2.7V)
IC6	9940 000 02548	IC LM7805
IC701	9940 000 02539	IC PT6311
IC1	9940 000 03421	IC TEA5757H
IC3	9965 000 42012	MCU PARTS ASS'Y (CPU U252) (for -/93)
IC3	9965 000 42105	MCU PARTS ASS'Y (CPU U252) (for -/98)

Note: Only these parts mentioned in the list are normal service parts.

ELECTRICAL PARTSLIST - AMP PART

- MISCELLANEOUS -

SPK1		9940 000 03431	5.1 SPEAKER JACK 6PZ-1
F202	⚠	9940 000 02531	FUSE F4AL250V
F203	⚠	9940 000 02531	FUSE F4AL250V
COD301		9940 000 02535	VOLUME CODER ED-1612-00-F15
J1100		9940 000 02534	HEADPHONE JACK 3.5MM
	⚠	9965 000 42021	TRANSFORMER 417D6-93 220V/50 (for -/93)
	⚠	9965 000 42107	TRANSFORMER 417D6-98 120V/230V (for -/98)
		9965 000 42022	AMP PCB ASS'Y MCD735/93
		9965 000 41029	AMP BIRCK ASSY MCD735/37

- DIODES -

ZD107	9940 000 02515	ZENER DIODE 3V
D101	9940 000 03502	THYRISTOR RS808
D201	9940 000 03714	DIODE IN60 L=52MM
ZD201	9940 000 03417	ZENER DIODE 5.6V

- IC & TRANSISTORS -

Q101	9940 000 02517	TRANSISTOR 2SB772
Q204	9940 000 02518	TRANSISTOR 8050C
Q205	9940 000 02519	TRANSISTOR 8550C
IC205	9940 000 04669	IC TL072
IC201	9940 000 04976	IC TDA7264
IC202	9940 000 04976	IC TDA7264
IC203	9940 000 04976	IC TDA7264
IC204	9940 000 02524	IC PT2309-S(L)
IC206	9940 000 04937	IC 7812
IC1301	9940 000 03767	IC TDA7265 STEREO POWER IC

Note: Only these parts mentioned in the list are normal service parts.